Altivar 12
variable speed drives

for 3-Phase asynchronous motors from .25 to 5 HP, .18 to 4 kW

e-Catalog

2014

Codienhaiau.com

Schneider Electric

Codienhaiau.com

Contents

- **Introduction....4**
  - Applications....4
  - Product....5
  - Functions....6
- **Specifications....7**
  - Electrical....7
  - Environmental....7
  - Certifications & compliance....8
  - I/O & control....9
- **Selection Tables....11**
  - Dimensions....11
  - Short circuit current ratings....13
- **Accessories & Options....14**
  - Configuration tools....14
  - User interface keypads....15
  - Communication networks....15
  - Voltage converter....15
  - Mounting Accessories....15
  - Drive input filters....16
  - Drive output filters....17
- **Quality Assurance....18**
- **Services & Support....20**

Codienhaiau.com

Introduction

Altivar™ 12 is the smallest variable speed drive on the market designed especially for compact machinery. The **Altivar 12** drives extend across a range of motor power ratings from **0.25 to 5 HP (0.18 to 5 kW)** and a combination of single and three-phase voltage ratings from 115V to 230 V.
Altivar 12 is easy to install and is even more intuitive with user-friendly programming and menus based on the principle of Plug&Play. Its compact size, integrated functions and the alternative base plate version make it a reliable, cost-effective solution for manufacturers of compact simple machines (OEMs) and installers.

Examples of Altivar 12 variable speed drive's features:
- Multi-Loader configuration tool to configure the drive with power off, without taking it out of its packaging
- Factory configuration for quick start-up, without the need for any adjustment, provides a high quality drive from the very first time the power is turned on
- High dynamic performance on acceleration as well as on braking and excellent speed regulation on machine load surges
- Integration of Standard (V/f), sensorless flux vector control and Pump/Fan (quadratic Kn^2) control profiles

Applications

Applications for simple industrial machines

- Handling: small conveyors, etc.
- Packaging: small labeling machines, small bagging machines, etc.
- Pump applications: suction pumps, centrifugal pumps, circulating pumps, etc.
- Fan applications: air or smoke extraction, plastic film making machines, ovens, boilers, washing machines, etc.

Applications for consumer machines

- Handling: access barriers, rotating advertising hoardings, etc.
- Healthcare industry machines: medical beds, hydromassage equipment, running machines, etc.
- Food and beverage industry machines: mills, kneading machines, mixers, etc.

Other applications

- Food and beverage industry: factory farming, greenhouses, etc.
- Miscellaneous applications: mobile machines and small appliances equipped with a power socket, etc.
- Applications that traditionally use other solutions:
  - 2-speed motor, DC motor, mechanical drive, etc.
  - Single-phase motor for pump and fan applications using mechanical control

Application of an ATV 12 in a mixer

Application of an ATV12 in an access barrier

Application of ATV12 in a pumping station

Coulemaiau.com

Introduction

Drive with heatsink ATV12H075M2

Drive on base plate ATV12P075M2

ATV12H075M2 with door on front panel open

Product

The Altivar 12 range of variable speed drives extends across a range of motor power ratings from 0.18 kW/0.25 HP to 4 kW/5 HP on three types of power supply: Two standard versions are available:

- Drive with heatsink for normal environments and fan-cooled enclosure:
  - 100…120 V single-phase, 0.25 to 1 HP, 0.18 to 0.75 kW (**ATV12H●●●F1**)
  - 200…240 V single-phase, 0.25 to 3 HP, 0.18 to 2.2 kW (**ATV12H●●●M2**)
  - 200…240 V three-phase, 0.25 to 5 HP, 0.18 to 4 kW (**ATV12H●●●M3**)
- Drive on a base plate for mounting on the machine frame; the frame surface area should allow heat to dissipate:
  - 100…120 V single-phase, 0.25 to 0.5 HP, 0.18 to 0.37 kW (**ATV12H018F1, P037F1**)
  - 200…240 V single-phase, 0.25 to 1 HP, 0.18 to 0.75 kW (**ATV12H018M2, P●●●M2**)
  - 200…240 V three-phase, 0.25 to 5 HP, 0.18 to 4 kW (**ATV12H018M3, P●●●M3**)

Note: *The Altivar 12 drive output voltage is 200…240 V three-phase, regardless of the type of drive line supply.*

The Altivar 12 drive integrates the Modbus communication protocol, as a standard, which can be accessed via the RJ45 connector located on the underside of the drive **(1)** with a 2-wire RS 485 physical interface. To communicate on the network, the Altivar 12 drive uses the Modbus RTU transmission mode. For more information on the complementary characteristics of the Modbus port (transmission speed, address, messaging...), please consult our website www.schneider-electric.com.

The entire range conforms to international standards IEC/EN 61800-5-1 and IEC/EN 61800-3, is UL, CSA, C-Tick, NOM, GOST certified and has been developed to meet the requirements of directives regarding the protection of the environment (RoHS, WEEE) as well as those of European Directives to obtain the CE mark.

Electromagnetic compatibility (EMC)

The integration of a level C1 EMC filter in ATV12●●●●M2 drives and the handling of EMC simplifies installation and makes it inexpensive to conform to CE standards.
This EMC filter can be disconnected via an internal switch **(1)**.
This filter is conform to the IEC61800-3 standard, environment 1, categories C1 and C2 depending on the model and on the motor cable length.

ATV12●●●●F1 and ATV12●●●●M3 drives are designed without an EMC filter. Filters are available as an option and can be installed by the customer to reduce the level of emissions.The ATV12●●●●M2 speed drives can also have an additional filter.

External accessories and options

External accessories and options can be used with Altivar 12 drives:

- EMC conformity kits, and plates for direct mounting on 35 mm/1.38 in ⊔ rail, etc.
- Motor chokes, additional EMC input filters, etc.

Codienhaiau.com

ATV12H075M2 with door on front panel open

Multi-Loader configuration tool

Remote terminal with cover closed

Remote terminal with cover open: RUN, FWD/REV and STOP buttons accessible

Product (continued)

Dialogue and configuration tools

Human-Machine Interface (HMI)

The 4-digit display **(2)** can be used to display states and detected faults, access parameters and modify them via the navigation button **(3)**.
The RUN and STOP buttons **(4)** can be made accessible on the front panel by removing the blanking plate **(5)** from the door; they must be configured in order to be active.

Simple Loader and Multi-Loader configuration tools

The Simple Loader tool enables configuration from a powered-up drive to be duplicated on another powered-up drive.
The Multi-Loader tool enables configurations from a PC or drive to be copied and duplicated on another drive; the Altivar 12 drives do not need to be powered up.

SoMove setup software

The SoMove setup software can be used with the Altivar 12 drive for configuration, adjustment, debugging (using the Oscilloscope function) and maintenance, just as it can for all other Schneider Electric variable speed drives and soft starters. It can also be used to customize the integrated display terminal menus. It can be used with a direct connection or a Bluetooth® wireless connection.

Remote display terminal

The Altivar 12 drive can be connected to a remote display terminal, which is available as an option. This terminal can be mounted on an enclosure door with IP 54 or IP 65 degree of protection. The maximum operating temperature is 50°C. It provides access to the same functions as the Human-Machine interface.

Functions

The Altivar 12 drive also features the following:

Application functions

- Switching between local control and control via the terminals
- Motor control profiles: standard (V/F), performance (sensorless vector control) and pump/fan (quadratic profile)
- Frequency skip
- Preset speeds
- PID regulator
- S ramp, U ramp, ramp switching
- Freewheel stop, fast stop
- Jog operation
- Configuring of logic and analog I/O
- Display of the logic input state
- Underload and overload detection
- Configuration of parameter display
- Error log, etc.

Functions for pumping applications

- Sleep/wake-up
- PID functions
- Protection functions :
  - Protection against overloads and overcurrents in continuous operation (pump jamming)
  - Machine protection with control of operating direction
  - Installation protection with underload and overload detection

Codiennaiau.com

Electrical Specifications

Input power	Voltage	V	100 - 15% to 120 + 10% single-phase for ATV 12●●●●F1 200 - 15% to 240 + 10% single-phase for ATV 12●●●●M2 200 - 15% to 240 + 10% three-phase for ATV 12●●●●M3
	Frequency	Hz	50…60 ± 5%
Drive output voltages		V	200…240 three-phase
Output frequency range		Hz	0.5…400
Configurable switching frequency		kHz	Nominal switching frequency: 4 kHz without derating in continuous operation Adjustable during operation from 2 to 16 kHz Above 4 kHz in continuous operation, apply derating to the nominal drive current of: ■ 10% for 8 kHz ■ 20% for 12 kHz ■ 30% for 16 kHz Above 4 kHz, the drive will reduce the switching frequency automatically in the event of excessive temperature rise. (1)
Speed range			1…20
Transient overtorque			150…170% of the nominal torque depending on the drive rating and the type of motor
Braking torque			■ Up to 70% of the nominal torque without resistor ■ Up to 150% of the nominal motor torque with braking unit (optional) at high inertia
Maximum transient current			150% of the nominal drive current for 60 seconds
Motor control profiles			Standard profile (voltage/frequency ratio) ■ Performance profile (sensorless flux vector control) ■ Pump/fan profile (Kn² quadratic ratio)
Maximum length of motor cable (including tap links)	Shielded cable	m	50
	Unshielded cable	m	100
Drive noise level	ATV12H018F1, H037F1 ATV12H018M2…H075M2 ATV12H018M3…H075M3 ATV12P●●●●●	dBA	0
	ATV12H075F1 ATV12HU15M2, HU22M2	dBA	45
	ATV12HU15M3…HU40M3	dBA	50
Electrical isolation			Electrical isolation between power and control (inputs, outputs, power supplies)

Environmental Specifications

Vibration resistance	Drive not mounted on rail ⊔			According to IEC/EN 60068-2-6: ■ 1.5 mm peak from 3 to 13 Hz ■ 1 gn from 13 to 200 Hz
Shock resistance				15 gn for 11 ms according to IEC/EN 60068-2-27
Maximum ambient pollution Definition of insulation				Degree 2 according to IEC/EN 61800-5-1
Environmental conditions Use				IEC 60721-3-3 classes 3C3 and 3S2
Relative humidity			%	5…95 non condensing, no dripping water, according to IEC 60068-2-3
Ambient air temperature*	Operation	ATV12H018F1, H037F1 ATV12H018M2…H075M2 ATV12H018M3…H075M3 ATV12P●●●●●	°C	- 10…+ 40 without derating Up to + 60, with the protective blanking cover removed and current derating of 2% per additional degree
		ATV12H075F1 ATV12HU15M2, HU22M2 ATV12HU15M3…HU40M3	°C	- 10…+ 50 without derating Up to + 60, with the protective blanking cover removed and current derating of 2% per additional degree
	Storage	ATV12●●●●●●	°C	- 25…+ 70

**Note: UL rating is for up to 40 °C. Higher temperature ratings listed above are for non-UL applications only.*

Maximum operating altitude	ATV12●●●●●●	m	1000 without derating
	ATV12●●●●F1	m	Up to 2000 for single-phase networks and corner grounded distribution networks, with current derating of 1% per additional 100 m
	ATV12●●●●M2	m	Up to 3000 meters for three-phase networks, with current derating of 1% per additional 100 m
Operating position Maximum permanent angle in relation to the normal vertical mounting position			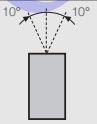

Codienhaiau.com

Certifications and Compliance

Conformity to standards			Altivar 12 drives have been developed to conform to the strictest international standards and the recommendations relating to electrical industrial control equipment (IEC, EN), in particular: IEC/EN 61800-5-1 (low voltage), IEC/EN 61800-3 (conducted and radiated EMC immunity and emissions).
	EMC Immunity		IEC/EN 61800-3, Environments 1 and 2 (EMC requirements and specific test methods) IEC/EN 61000-4-2 level 3 (electrostatic discharge immunity test) IEC/EN 61000-4-3 level 3 (radiated, radio-frequency, electromagnetic field immunity test) IEC/EN 61000-4-4 level 4 (electrical fast transient/burst immunity test) IEC/EN 61000-4-5 level 3 (surge immunity test) IEC/EN 61000-4-6 level 3 (immunity to conducted disturbances, induced by radio-frequency fields) IEC/EN 61000-4-11 (voltage dips, short interruptions and voltage variations immunity tests)
	Conducted EMC emissions for drives	ATV12●●●●F1 ATV12H018M3 ATV12●037M3...●U22M3	With additional EMC filter: ■ IEC/EN 61800-3, Environment 1 (public network) in restricted distribution: ■ Category C1, from 4 to 12 kHz for a shielded motor cable length ≤ 5 m (except ATV12●018M3…●075M3) ■ Category C2, from 4 to 12 kHz for a shielded motor cable length ≤ 20 m ■ IEC/EN 61800-3, Environment 2 (industrial network): ■ Category C3, from 4 to 12 kHz for a shielded motor cable length ≤ 20 m
		ATV12●●●●M2	■ IEC/EN 61800-3, Environment 1 (public network) in restricted distribution: ■ Category C1, at 2, 4, 8, 12 and 16 kHz for a shielded motor cable length ≤ 5 m ■ Category C2: ATV12H018M2...●075M2, from 2 to 12 kHz for a shielded motor cable length ≤ 5 m and at 2, 4, 16 kHz for a shielded motor cable length ≤ 10 m ■ Category C2: ATV12HU15M2...HU22M2, from 4 to 16 kHz for a shielded motor cable length ≤ 5 m and at 2, 4, 8, 12 and 16 kHz for a shielded motor cable length ≤ 10 m With additional EMC filter: ■ IEC/EN 61800-3, Environment 1 (public network) in restricted distribution: □ Category C1, from 4 to 12 kHz for a shielded motor cable length ≤ 20 m □ Category C2, from 4 to 12 kHz for a shielded motor cable length ≤ 50 m ■ IEC/EN 61800-3, Environment 2 (industrial network): □ Category C3, from 4 to 12 kHz for a shielded motor cable length ≤ 50 m
	Radiated EMC emissions for drives	ATV12●●●●●●	■ IEC/EN 61800-3, Environment 1 (public network) in restricted distribution: □ Category C2, from 2 to 16 kHz for a shielded motor cable
CE marking			The drives are marked CE according to the European low voltage (2006/95/EC) and EMC (2004/108/EC) directives
Product certifications			UL, CSA, NOM, GOST and C-Tick
Degree of protection			IP 20

Codienhaiau.com

I/O and Control Specifications

Available internal supplies			Protected against short-circuits and overloads: ■ One 5 V ⎓ supply (± 5%) for the reference potentiometer (kΩ), maximum current 10 mA ■ One 24 V ⎓ supply (-15%/+20%) for the control inputs, maximum current 100 mA
Analog input	AI1		1 software-confi gurable voltage or current analog input: ■ Voltage analog input: 0…5 V ⎓ (internal power supply only) or 0…10 V ⎓, impedance 30 kΩ ■ Analog current input: X-Y mA by programming X and Y from 0…20 mA, impedance 250 Ω Sampling time: < 10 ms Resolution: 10 bits Accuracy: ± 1% at 25°C Linearity: ± 0.3% of the maximum scale value Factory setting: Input confi gured as voltage type
Analog output	AO1		1 software-configurable voltage or current analog output: ■ Analog voltage output: 0…10 V ⎓ , minimum load impedance 470 Ω ■ Analog current output: 0 to 20 mA, maximum load impedance 800 Ω Update time: < 10 ms Resolution: 8 bits Accuracy: ± 1% at 25°C
Relay outputs	R1A, R1B, R1C		1 protected relay output, 1 N/O contact and 1 N/C contact with common point Response time: 30 ms maximum Minimum switching capacity: 5 mA for 24 V ⎓ Maximum switching capacity: ■ On resistive load (cos φ = 1 and L/R = 0 ms): 3 A at 250 V ∿ or 4 A at 30 V ⎓ ■ On inductive load (cos φ = 0.4 and L/R = 7 ms): 2 A at 250 V ∿ or 30 V ⎓
LI logic inputs	LI1…LI4		4 programmable logic inputs, compatible with PLC level 1, standard IEC/EN 61131-2 24 V ⎓ internal power supply or 24 V ⎓ external power supply (min. 18 V, max. 30 V) Sampling time: < 20 ms Sampling time tolerance: ± 1 ms Factory-set with 2-wire control in “transition” mode for machine safety reasons: ■ LI1: forward ■ LI2…LI4: not assigned Multiple assignment makes it possible to configure several functions on one input (for example: LI1 assigned to forward and preset speed 2, LI3 assigned to reverse and preset speed 3) Impedance 3.5 kΩ
	Positive logic (Source)		Factory setting State 0 if < 5 V, state 1 if > 11 V
	Negative logic (Sink)		Software-configurable State 0 if > 16 V or logic input not wired, state 1 if < 10 V
Logic output	LO+, LO-		One 24 V ⎓ logic output assignable as positive logic (Source) or negative logic (Sink) open collector type, compatible with level 1 PLC, standard IEC/EN 61131-2 Maximum voltage: 30 V Linearity: ± 1% Maximum current: 10 mA (100 mA with external power supply) Impedance: 1 kΩ Update time: < 20 ms
Communication	Protocol		Modbus
	Structure	Connector	1 RJ45 connector
		Physical interface	2-wire RS 485
		Transmission mode	RTU
		Transmission speed	Configurable via the Human-Machine interface, remote display terminal or SoMove setup software: 4800 bps, 9600 bps, 19200 bps or 38400 bps
		Number of subscribers	31 maximum
		Polarization	No polarization impedance. This must be provided by the wiring system (for example, in the master)
		Address	1 to 247, configurable via the Human-Machine interface, remote display terminal or SoMove setup software
	Services	Profile	Based on IEC 61800-7-301 (CiA 402 profile)
		Messaging	Read Holding Registers (03) 29 words maximum Write Single Register (06) 29 words maximum Write Multiple Registers (16) 27 words maximum Read/Write Multiple Registers (23) 4/4 words maximum Read Device Identification (43)
		Communication monitoring	Can be inhibited. Time out can be set between 0.1 s and 30 s
	Diagnostics	Via the Human-Machine interface or remote display terminal	On display unit

Sodierhaiau.com

I/O and Control Specifications (continued)

Acceleration and deceleration ramps		Ramp profile: ■ Linear from 0 to 999.9 s ■ S ramp ■ U ramp Automatic adaptation of deceleration ramp time if braking capacities exceeded, although this adaptation can be disabled (use of braking unit)
Emergency braking		By DC injection: automatically as soon as the estimated output frequency drops to < 0.2 Hz, period adjustable from 0.1 to 30 s or continuous, current adjustable from 0 to 1.2 In
Main drive protection features		Thermal protection against overheating Protection against short-circuits between motor phases Overcurrent protection between motor phases and ground Protection in the event of line overvoltage and undervoltage Input phase loss protection, in three-phase
Motor protection		Thermal protection integrated in the drive by continuous calculation of the I2t
Frequency resolution		Display unit: 0.1 Hz Analog inputs: 10-bit A/D converter
Time constant on a change of setpoint	ms	20 ± 1 ms

Additional Information

Use with a motor with different power to the drive rating		The device can power any motor which has a lower rating than that for which the drive was designed, provided that the minimum current value is complied with: Ith = 0.2 x drive In. For motor ratings slightly higher than that of the drive, check that the current taken does not exceed the continuous output current of the drive.
Connecting motors in parallel		The drive rating must be greater than or equal to the sum of the currents of the motors to be connected to the drive (In). In this case, it is necessary to provide external thermal protection for each motor using probes or thermal overload relays. Use of a motor choke is recommended in the following cases: ■ When three or more motors are connected in parallel ■ When the motor cable length (L), including all tap links (L1, L2…Lx), is longer than the maximum permitted motor cable length 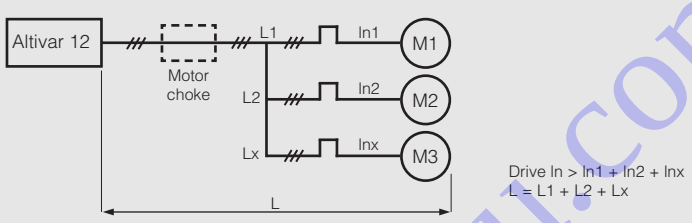
Motor switching at the drive output		Motor switching is possible with the drive unlocked. The integrated protection in Altivar 12 drives offers better immunity to downstream breaking of the powered motor.

Codienhaiau.com

ATV12H018M2

ATV12H075M2

ATV12HU40M3

ATV12HU15M2TQ (8)

Drives with heatsink

Motor Power(1)		Line supply			Altivar 12						
		Max. line current (2)		Max. prospective line Isc	Maximum continuous output current (In) (1)	Maximum transient current for 60 s	Dissipated power at maximum output current (In) (1)	Part number	Frame size	Weight (3)	
		at U1	at U2		at U2						
HP	kW	A	A	kA	A	A	W			lbs	kg
Single-phase supply voltage: 100…120 V 50/60 Hz (4)											
0.25	0.18	6	5	1	1.4	2.1	18	**ATV12H018F1** (5)	A1	1.5	0.7
0.5	0.37	11.4	9.3	1	2.4	3.6	29	**ATV12H037F1**	A2	1.7	0.8
1	0.75	18.9	15.7	1	4.2	6.3	48	**ATV12H075F1**	B1	2.9	1.3
Single-phase supply voltage: 200…240 V 50/60 Hz (4) (6)											
0.25	0.18	3.4	2.8	1	1.4	2.1	18	**ATV12H018M2** (5) (7) (10)	A1	1.5	0.7
0.55	0.37	5.9	4.9	1	2.4	3.6	27	**ATV12H037M2** (7) (10)	A2	1.5	0.7
0.75	0.55	8	6.7	1	3.5	5.3	34	**ATV12H055M2** (7) (10)	A3	1.7	0.8
1	0.75	10.2	8.5	1	4.2	6.3	44	**ATV12H075M2** (7) (10)	A3	1.7	0.8
2	1.5	17.8	14.9	1	7.5	11.2	72	**ATV12HU15M2** (8) (9)	B2	3.1	1.4
3	2.2	24	20.2	1	10	15	93	**ATV12HU22M2** (8) (9)	B2	3.1	1.4
Three-phase supply voltage: 200…240 V 50/60 Hz (4)											
0.25	0.18	2	1.7	5	1.4	2.1	16	**ATV12H018M3** (5)	A1	1.5	0.7
0.55	0.37	3.6	3	5	2.4	3.6	24	**ATV12H037M3**	A2	1.7	0.8
1	0.75	6.3	5.3	5	4.2	6.3	41	**ATV12H075M3**	A3	1.7	0.8
2	1.5	11.1	9.3	5	7.5	11.2	73	**ATV12HU15M3**	B3	2.6	1.2
3	2.2	14.9	12.5	5	10	15	85	**ATV12HU22M3**	B3	2.6	1.2
-	3	19	15.9	5	12.2	18.3	94	**ATV12HU30M3**	C1	4.4	2
5	4	23.8	19.9	5	16.7	25	128	**ATV12HU40M3**	C1	4.4	2

Dimensions (overall)

Frame Size	W x H x D	
	EMC plate not fixed	
	inches	mm
A1	2.8 x 5.6 x 4	72 x 143 x 102
A2	2.8 x 5.6 x 4.8	72 x 143 x 122
A3	2.8 x 5.6 x 5.2	72 x 143 x 132
B1, B2	4.1 x 5.6 x 6.2	105 x 143 x 158
B3	4.1 x 5.6 x 5.2	105 x 143 x 132
C1	5.5 x 7.2 x 5.6	140 x 183 x 143

(1) These values are given for a nominal switching frequency of 4 kHz, for use in continuous operation. If operation above 4 kHz needs to be continuous, the nominal drive current should be derated by 10% for 8 kHz, 20% for 12 kHz and 30% for 16 kHz. The switching frequency can be set between 2 and 16 kHz for all ratings. Above 4 kHz, the drive will reduce the switching frequency automatically in the event of an excessive temperature rise. See the derating curves in the User Manual.
(2) Typical value for the indicated motor power and for the maximum prospective line Isc.
(3) Weight of product without packaging.
(4) Min. (U1) and max. (U2) nominal supply voltage: 100 (U1)…120 V (U2), 200 (U1)…240 V (U2).
(5) Due to the poor heat dissipation, the ATV12H018●● drive is only supplied as a base plate version.
(6) This drive is delivered with a disconnectable category C1 EMC filter. This drive complies with the IEC/EN 61800-3 standard, Environment 1 (public network), category C1, at 2, 4, 8, 12 and 16 kHz for a shielded motor cable length inferior or equal to 5 m.
(7) Complies with the IEC/EN 61800-3 standard, Environment 1 (public network), category C2, from 2 to 12 kHz for a shielded motor cable length inferior or equal to 5 m; and at 2, 4, 8, 12 and 16 kHz for a shielded motor cable length inferior or equal to10 m.
(8) Complies with the IEC/EN 61800-3 standard, Environment 1 (public network), category C2, from 4 to 16 kHz for a shielded motor cable length inferior or equal to 5 m; and at 2, 4 and 16 kHz for a shielded motor cable length inferior or equal to10 m.
*(9) Available in lots of 7: add **TQ** at the end of the Part Number. ATV12HU22M2 becomes **ATV12HU22M2TQ.***
*(10) Available in lots of 14: add **TQ** at the end of the Part Number. For example, ATV12H018M2 becomes **ATV12H018M2TQ.***

Part number explanation

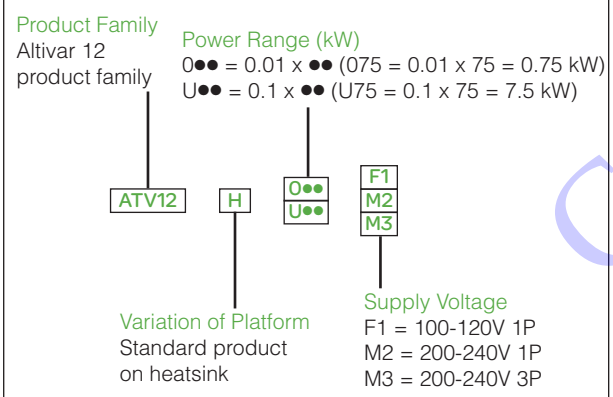

Commercial

Selection Table

Drives on a baseplate

ATV12PU22M3

Drives on a base plate

Motor		Line supply			Altivar 12						
Power (1)		Max. line current (2)		Max. prospective line Isc	Maximum continuous output current (In) (1)	Maximum transient current for 60 s	Dissipated power at maximum output current (In) (1)	Part number	Frame size	Weight (3)	
		at U1	at U2		at U2						
HP	kW	A	A	kA	A	A	W			lbs	kg
Single-phase supply voltage: 100…120 V 50/60 Hz (4)											
0.25	0.18	6	5	1	1.4	2.1	18	**ATV12H018F1** (5)	A1	1.5	0.7
0.5	0.37	11.4	9.3	1	2.4	3.6	29	**ATV12P037F1** (6)	AP	1.5	0.7
Single-phase supply voltage: 200…240 V 50/60 Hz (4) (7)											
0.25	0.18	3.4	2.8	1	1.4	2.1	18	**ATV12H018M2** (5) (8)	A1	1.5	0.7
0.5	0.37	5.9	4.9	1	2.4	3.6	27	**ATV12P037M2** (6)	AP	1.5	0.7
0.75	0.55	8	6.7	1	3.5	5.3	34	**ATV12P055M2** (6)	AP	1.5	0.7
1	0.75	10.2	8.5	1	4.2	6.3	44	**ATV12P075M2** (6)	AP	1.5	0.7
Three-phase supply voltage: 200…240 V 50/60 Hz (4)											
0.25	0.18	2	1.7	5	1.4	2.1	16	**ATV12H018M3** (5)	A1	1.5	0.7
0.5	0.37	3.6	3	5	2.4	3.6	24	**ATV12P037M3** (6)	AP	1.5	0.7
1	0.75	6.3	5.3	5	4.2	6.3	41	**ATV12P075M3** (6)	AP	1.5	0.7
2	1.5	11.1	9.3	5	7.5	11.2	73	**ATV12PU15M3** (6)	BP	2.2	1
3	2.2	14.9	12.5	5	10	15	85	**ATV12PU22M3** (6)	BP	2.2	1
-	3	19	15.9	5	12.2	18.3	94	**ATV12PU30M3** (6)	CP	3.5	1.6
5	4	23.8	19.9	5	16.7	25	128	**ATV12PU40M3** (6)	CP	3.5	1.6

Dimensions (overall)

Frame Size	W x H x D	
	EMC plate not fixed	
	inches	mm
A1, AP	2.8 x 5.6 x 4	72 x 143 x 102
BP	4.1 x 5.6 x 3.9	105 x 143 x 98
CP	5.5 x 7.2 x 3.9	140 x 184 x 100

(1) These values are given for a nominal switching frequency of 4 kHz, for use in continuous operation. If operation above 4 kHz needs to be continuous, the nominal drive current should be derated by 10% for 8 kHz, 20% for 12 kHz and 30% for 16 kHz. The switching frequency can be set between 2 and 16 kHz for all ratings. Above 4 kHz, the drive will reduce the switching frequency automatically in the event of an excessive temperature rise. See the derating curves in the User Manual.
(2) Typical value for the indicated motor power and for the maximum prospective line Isc.
(3) Weight of product without packaging.
(4) Min. (U1) and max. (U2) nominal supply voltage: 100 (U1)…120 V (U2). 200 (U1)…240 V (U2).
(5) Due to the poor heat dissipation the ATV12H018●● drive is only supplied as a base plate version.
(6) To size the ATV12P●●●●● drive correctly see the Installation manual for the Altivar 12 base plate version.
(7) This drive is delivered with a disconnectable category C1 EMC filter. This drive complies with the IEC/EN 61800-3 standard, Environment 1 (public network), category C1, at 2, 4, 8, 12 and 16 kHz for a shielded motor cable length inferior or equal to 5 m; and category C2, from 2 to 12 kHz for a shielded motor cable length inferior or equal to 5 m and at 2, 4 and 16 kHz for a shielded motor cable length inferior or equal to 10 m.
*(8) Available in lots of 14: add **TQ** at the end of the Part Number. For example. ATV12H018M2 becomes **ATV12H018M2TQ.***

Part number explanation

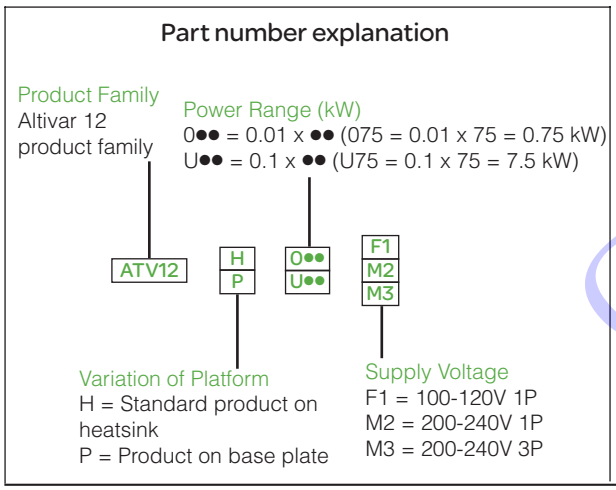

Codienhaiau.com

Altivar 12 variable speed drives

Short Circuit Current Ratings

ATV12 Drive					Short Circuit Current Ratings[1]									
Input Voltage +10%/ -15% 60 Hz Y	HP	kw	Input with-stand Rating (kA)[6]	Part number	With QO Circuit Breaker					With GV2P/3P		With Fuses		
					QO	QOB	QOU	A	SCCR (kA)[7] x	GV2P/3P Type E [2][3]	SCCR (kA)	FUses (A)[5] Z1, Z2	SCCR (kA)	Line Reac-tor[4]
120 V, 1 phase	0.25	0.18	1	ATV12H018F1	yes	yes	yes	10	1	GV2P10	1	Ferraz HSJ (15)	1	–
	0.5	0.37	1	ATV12●037F1	yes	yes	yes	20	1	GV2P14	1	Ferraz HSJ (25)	1	–
	1	0.75	1	ATV12H075F1	yes	yes	yes	25	1	GV2P20	1	Ferraz HSJ (40)	1	–
240 V, 1 phase	0.25	0.18	1	ATV12H018M2	yes	yes	yes	10	1	GV2P08	1	Fast Acting Class CC Ferraz TDR (7)	1	–
	0.5	0.37	1	ATV12●037M2	yes	yes	yes	10	1	GV2P10	1	Ferraz HSJ (15)	1	–
	0.75	0.55	1	ATV12●055M2	yes	yes	yes	15	1	GV2P14	1	Ferraz HSJ (25)	1	–
	1	0.75	1	ATV12●075M2	yes	yes	yes	20	1	GV2P14	1	Ferraz HSJ (25)	1	–
	2	1.5	1	ATV12HU15M2	no	no	yes	25	1	GV2P20	1	Ferraz HSJ (40)	1	–
	3	2.2	1	ATV12HU22M2	no	no	yes	35	1	GV2P22	1	Ferraz HSJ (45)	1	–
240 V, 3 phase	0.25	0.18	5	ATV12H018M3	yes	yes	yes	10	5	GV2P07	5	Fast Acting Class CC Ferraz ATDR (7)	5	–
	0.5	0.37	5	ATV12●037M3	yes	yes	yes	10	5	GV2P08	5	Fast Acting Class CC Ferraz ATDR (7)	5	–
	1	0.75	5	ATV12●075M3	yes	yes	yes	15	5	GV2P14	5	Ferraz HSJ (15)	5	–
	2	1.5	5	ATV12●U15M3	yes	yes	yes	15	5	GV2P16	5	Ferraz HSJ (25)	5	–
	3	2.2	5	ATV12●U22M3	yes	yes	yes	25	5	GV2P20	5	Ferraz HSJ (25)	5	–
	-	3	5	ATV12●U30M3	no	no	yes	30	5	GV2P21	5	Ferraz HSJ (40)	5	–
	5	4	5	ATV12●U40M3	no	no	yes	40	5	GV2P22	5	Ferraz HSJ (45)	5	–
240 V, 3 phase	0.25	0.18	5	ATV12H018M3	yes	yes	yes	10	10	GV2P07	50	3	65	3%
	0.5	0.37	5	ATV12●037M3	yes	yes	yes	10	10	GV2P08	50	8	65	3%
	1	0.75	5	ATV12●075M3	yes	yes	yes	15	10	GV2P14	50	15	65	3%
	2	1.5	5	ATV12●U15M3	yes	yes	yes	15	10	GV2P13	50	25	65	3%
	3	2.2	5	ATV12●U22M3	yes	yes	yes	25	10	GV2P18	50	30	65	3%
	-	3	5	ATV12●U30M3	no	no	yes	30	10	GV2P25	50	40	65	3%
	5	4	5	ATV12●U40M3	no	no	yes	40	10	GV2P32	50	50	65	3%

(1) Types of enclosures that can be used: 1, 12, 3, 3R, 4, and 4X-all non-ventilated.
(2) The GV2Ppp self-protected manual combination starter must be used with the GV2GH7 insulating barrier to meet the UL 508 Type E rating.
(3) The GV3Ppp self-protected manual combination starter must be used with the GV3G66 insulating barrier and the GVAM11 auxiliary contact block to meet the UL 508 Type E rating.
(4) The line reactor is required when the ATV12 drive is used in a system with a current availability higher than the drive's SCCR design.
(5) When fuse type is not specified any Class J or CC can be used. If fuse manufacturer is not specified any fuse manufacturer can be used.
(6) Input withstand rating is that for which the product has been designed thermally. Installation on a supply greater than this level will require additional inductance to satisfy this level
(7) Output interrupt rating relies on Integral solid state short circuit protection. This does not provide branch circuit protection. Branch circuit protection must be provided in accordance with the National Electrical Code and any additional local codes. This is dependant on the type of installation.

Suitable for use on a circuit capable of delivering not more than___X___rms symmetrical kiloAmperes,___Y___Volts maximum, when protected by___Z1___with a maximum rating of___Z2___.

Codienhiau.com

Configuration tools

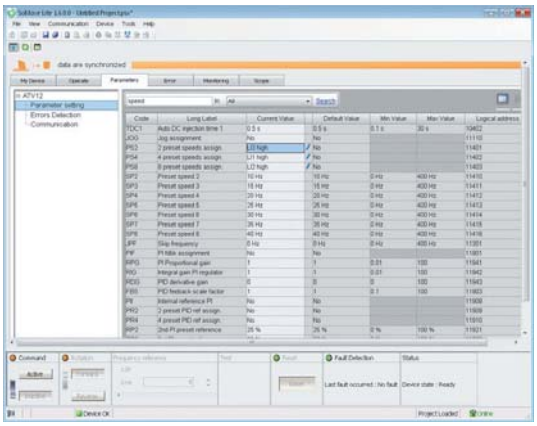

SoMove lite setup software
SoMove is PC user-friendly setup software for the device that allows users to:
- Configure
- Start-up
- Maintain

USB/RJ45 cable
Equipped with a USB connector and an RJ45 connector. For connecting a PC to the Altivar 12 drive. Length: 8.2 ft., 2.5 m

Modbus/Uni-Telway-Bluetooth® adaptor
For establishing a Bluetooth® wireless connection between the Altivar 12 drive and a PC equipped with a Bluetooth® wireless link.
Pack contents:
- 1 Bluetooth® adaptor (range 65.6 ft., 20 m, class 2) with an RJ45 connector
- For SoMove : 3.3 x .3 ft., 1 x 0.1 m, cordset with 2 RJ 45 connectors (1)
- For TwidoSuite : 3.3 x .3 ft, 1 x 0.1 m, cordset with 1 RJ 45 connector and 1 connector of mini DIN type

USB - Bluetooth® adaptor for PC
Required for a PC which is not equipped with Bluetooth® technology. Connects to a USB port on the PC. Range of 10 m (class 2).

Configuring the drive in its packaging with the Multi-Loader tool VW3A8121+ cordset VW3A8126

Description	For drives	Part number	Weight	
			lbs	kg
SoMove lite setup software	ATV12●●●●●●		–	–
USB/RJ45 cable	ATV12●●●●●●	**TCSMCNAM3M002P**	–	–
Modbus/Uni-Telway-Bluetooth® adaptor	ATV12●●●●●●	**TCSWAAC13FB**	0.1	0.1
USB - Bluetooth® adaptor for PC	–	**VW3A8115**	0.4	0.2

Simple Loader tool
For duplicating one drive configuration on another drive. The drives must be powered-up. The tool is supplied with a cordset equipped with 2 RJ45 connectors.

Multi-Loader tool (1)
For copying a configuration on a PC or drive and duplicating it on another drive. The Altivar 12 drives do not need to be powered-up.
Supplied with the tool:
- 1 cordset equipped with 2 RJ45 connectors
- 1 cordset equipped with a USB type A connector and a USB Mini-B type connector
- 1 x 2 GB SD memory card
- 1 female/female RJ45 adaptor
- 4 AA/LR6 1.5 V batteries

TCSWAAC13FB

Cordset for Multi-Loader tool (2)
For connecting the Multi-Loader tool to the Altivar 12 drive in its packaging. Equipped with a non-locking RJ45 connector with special mechanical catch on the drive end and an RJ45 connector on the Multi-Loader end.

Description	For drives	Part number	Weight	
			lbs	kg
Simple Loader tool	ATV12●●●●●●	**VW3A8120**	–	–
Multi-Loader tool (1)	ATV12●●●●●●	**VW3A8121**	–	–
Cordset for Multi-Loader tool (2)	ATV12●●●●●● in its packaging	**VW3A8126**	–	–

(1) Also includes other components for connecting compatible Schneider Electric devices.

Codienhaiau.com

VW3A1006 with cover open: RUN, FWD/REV and STOP buttons accessible

User interface keypads

Description	Rating	Part number	Weight	
			lbs	kg
Remote display keypads For mounting the Human-Machine interface on an enclosure door with IP 54 or IP 65 degree of protection. A remote-mounting cordset VW3A1104R●● is also required.	IP 54 degree of protection	**VW3A1006**	0.6	0.3
	IP 65 degree of protection	**VW3A1007**	0.6	0.3
Cables equipped with 2 RJ45 connectors. For connecting the VW3 A1 006 or VW3A1007 remote display keypad to the Altivar 12 drive.	Length: 1 m / 3.3 ft	**VW3A1104R10**	0.1	0.1
	Length: 3 m / 9.8 ft	**VW3A1104R30**	0.3	0.2

Dimensions (overall)

Remote display terminal	W x H x D	
	inches	mm
VW3A1006	2 x 2.8 x .9	50 x 70 x 22.7

Modbus serial link (1)

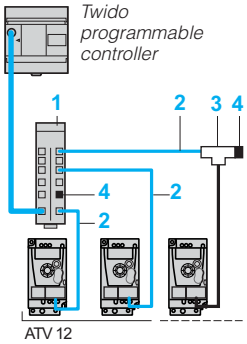

Example of Modbus diagram with connection via splitter box and RJ45 connectors

Communication networks

Description	Item no.		Length ft.	Length m	Part number	Weight lbs	Weight kg
Modbus splitter box - 10 RJ45 connectors and 1 screw terminal block	(1)		–	–	**LU9GC3**	1.1	0.5
Cordsets for Modbus serial link - equipped with 2 RJ45 connectors	(2)		1	.3	**VW3A8306R03**	0.1	0.03
			3.3	1	**VW3A8306R10**	0.1	0.06
			9.8	3	**VW3A8306R30**	0.2	0.1
Modbus T-junction boxes (with integrated cable)	(3)		1	.3	**VW3A8306TF03**	0.4	0.2
			3.3	1	**VW3A8306TF10**	0.4	0.2
Line terminators (2) (3) **-** For RJ45 connector	(4)	R = 120 Ω C = 1 nf	–	–	**VW3A8306RC**	0.02	0.01
		R = 150 Ω	–	–	**VW3A8306R**	0.02	0.01

Voltage converter

Description	Part number	Weight lbs	Weight kg
+15 V/+24 V voltage converter Connects directly to the control terminals	**VW3A9317**	–	–

Mounting Accessories

Description	For drives	Part number	Weight lbs	Weight kg
DIN rail mounting kit Mounting plates for attaching on 35 mm wide DIN rail	ATV12H018F1, H037F1 ATV12H018M2…H075M2 ATV12H018M3…H075M3	**VW3A9804**	0.6	0.3
	ATV12H075F1 ATV12HU15M2, HU22M2 ATV12HU15M3, HU22M3	**VW3A9805**	0.8	0.4

Dimensions (overall)

Fixing plates for fixing on an AM1 ED 35 mm DIN rail	W x H x D	
	inches	mm
VW3A9804	3.1 x 5.7 x 1.5	77.5 x 143.6 x 37.9
VW3A9805	4.1 x 5.7 x 1.6	105 x 144 x 40

VW3A9804

(1) Cable depends on the type of controller or PLC.
(2) Order in multiples of 2.
(3) Depends on the bus architecture.

Conmhaiau.com

VW3A9523

VW3A9524

Drive input filter

EMC compliance

EMC wiring kits

These provide a connection compliant with EMC standards (for further information, please consult our website www.schneider-electric.com). The kit consists of:

- The EMC plate
- Clamps
- Mounting accessories

For drives	Part number	Weight	
		lbs	kg
ATV12H018F1, H037F1 ATV12H018M2…H075M2 ATV12H018M3…H075M3 ATV12P037F1 ATV12P037M2…P075M2 ATV12P037M3…P075M3	**VW3A9523**	0.4	0.2
ATV12H075F1 ATV12HU15M2, HU22M2 ATV12HU15M3, HU22M3 ATV12PU15M3, PU22M3	**VW3A9524**	0.4	0.2
ATV12HU30M3, HU40M3 ATV12PU30M3, PU40M3	**VW3A9525**	0.4	0.2

VW3A4416

Optional EMC input filters

For compliance with the requirements of standard IEC/EN 61800-3, category C1, C2 or C3, in Environment 1 (public network) or Environment 2 (industrial network), depending on the drive rating.

For drives	Optional EMC input filter								
	Shielded cable maximum length (1)						Part number	Weight	
	IEC 61800-3 (2)								
	Category C1 from 4 to 12 kHz		Category C2 from 4 to 12 kHz		Category C3 from 4 to 12 kHz				
	ft.	m	ft.	m	ft.	m		lbs	kg
ATV12H018F1…H037F1 ATV12P037F1	16.4	5	65.6	20	65.6	20	**VW3A4416**	2469.2	1,120
ATV12H018M2…H075M2 ATV12P037M2…P075M2	65.6	20	164	50	164	50			
ATV12H075F1	16.4	5	65.6	20	65.6	20	**VW3A4417**	3207.7	1,455
ATV12HU15M2, HU22M2 ATV12PU15M2, PU22M2	65.6	20	164	50		50			
ATV12H018M3…H075M3 ATV12P037M3… P075M3	–	–	65.6	20	65.6	20	**VW3A4418**	2667.6	1,210
ATV12HU15M3, HU22M3 ATV12PU15M3, PU22M3	16.4	5	65.6	20	65.6	20	**VW3A4419**	3174.7	1,440

ATV12H075M2 with EMC kit VW3A9523 fixed on EMC filter VW3A4416

Dimensions (overall)

Additional EMC input filters	W x H x D	
	inches	mm
VW3A4416	3 x 7.6 x 1.2	75 x 194 x 30
VW3A4417	4.6 x 7.2 x 1.6	117 x 184 x 40
VW3A4418	3 x 7.6 x 1.6	75 x 194 x 40
VW3A4419	4.6 x 7.5 x 1.6	117 x 190 x 40

(1) The filter choice table gives the maximum lengths of the shielded cables between the motors and the drives. These maximum lengths are given for indication because they depend on the motor properties and on the used cables. In the case of parallel motors, the total addition of the lengths must be taken into account.

(2) IEC 61800-3 standard : EMC immunity and EMC conducted and radiated emissions :

- categories C1 et C2 : public network

- category C3 : industrial network

Codenhaiau.com

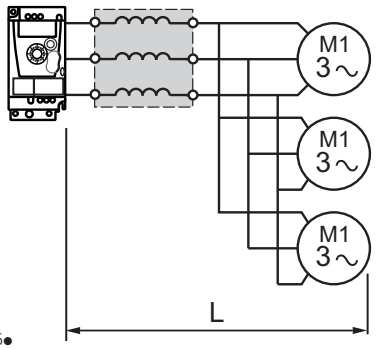

Motor choke
ATV12VW3A455●

Drive output filters

Motor Chokes

Motor chokes, also known as load reactors, can be inserted between the Altivar 12 drive and motor to:
- Reduce the peak voltage in the motor and motor cable
- Limit the dv/dt at the motor terminals (500 to 1500 V/µs), for cables longer than 50 m
- Filter interference caused by opening of a contactor placed between the filter and the motor
- Reduce the motor ground leakage current and lower the chance of nuisance ground fault trips
- Smooth the motor current wave form to reduce motor noise

Required: When the motor cable length (L), including tap-offs, is:
- ☐ 50…100 m for a shielded motor cable (1),
- ☐ 100…200 m for an unshielded motor cable (1).

Nominal current A	For drives	Part number	Weight		UL recognized CSA certified Part Number	Weight	
			lbs	kg		lbs	kg
4	ATV12H018F1, H037F1 ATV12H018M2…H055M2 ATV12H018M3, H037M3 ATV12P037F1 ATV12P037M2, P055M2 ATV12P037M3	**VW3A4551**	4.1	1.9	**RL00412**	11	5
10	ATV12H075F1 ATV12H075M2 ATV12H075M3 ATV12P075M2 ATV12P075M3	**VW3A4552**	8.2	3.7	**RL00412**	11	5
10	ATV12HU15M2 ATV12HU15M3 ATVPU15M3	**VW3A4552**	8.2	3.7	**RL00812**	15	6.8
16	ATV12HU22M2 ATV12HU22M3, HU30M3 ATV12PU22M3, PU30M3	**VW3A4553**	9	4.1	**RL01212**	17	7.7
30	ATV12HU40M3 ATV12PU40M3	**VW3A4554**	13.6	6.2	**RL01812**	19	8.6

Dimensions (overall)

Motor chokes	W x H x D	
	inches	mm
VW3A4551	3.9 x 5.3 x 2.4	100 x 135 x 60
VW3A4552, A4553	5.1 x 6.1 x 3.5	130 x 155 x 90
VW3A4554	6.1 x 6.7 x 5.3	155 x 170 x 135
RL00412, RL00812, RL01212, RL01812	8 x 8 x 6	203 x 203 x 152.4

(1) Motor cable length given for a switching frequency of 4 kHz.

Codienhaiau.com

Quality Assurance

This document communicates a summary of the processes, procedures and quality assurance that are in place for the manufacturing of the Altivar 12. Altivar 12 drives are produced in ISO certified facilities. Customers can be assured that these processes and procedures are followed. Audits conducted by third party representatives verify documented processes and procedures are followed and provide certification to ISO 14001. Schneider Electric utilizes quality assurance processes and procedures to verify the integrity of components and the assembly process. Data is gathered on each unit and tracked via the unique serial number of each unit during the manufacturing process. The document was not intended to imply this data is available in a format that could be easily communicated externally nor that a written report is generated for each product.

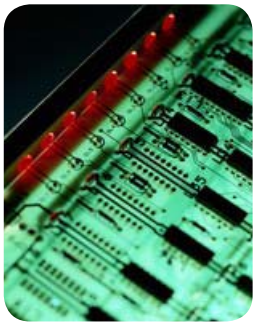

Outline of Test Process and Procedures

Printed circuit board testing, dielectric testing, preliminary memory and functional test, unit operation with burn-in testing, and final verification testing are conducted at various points in the manufacturing process for each drive. All aspects of these tests during the assembly are logged electronically for internal tracking purposes. Each unit is checked and product conformance status is recorded at each test station. Appropriate conformance information is carried in nonvolatile memory within each unit. The sequence of testing is monitored. Each test station requires a successful bar code scan on entry to validate that each drive has successfully completed any prerequisite test stations.

In addition to the processes and procedures detailed below, each test station has a visual quality inspection check list. This check list includes a physical inspection for proper connections, power component polarities, proper assembly torques, mechanical integrity, and proper documentation.

Printed Circuit Board Testing

Printed circuit boards used in the assembly of the ATV12 undergo testing as a part of the board assembly. These tests include:

- In-circuit, component level testing
- Functional power-on testing
- Thermal-cycle stress testing
- High-potential test applied to high voltage boards

Dielectric Testing (Hi Pot Test)

This test verifies the dielectric withstand between customer connection points and ground to validate that required isolation barriers are intact. Isolation barriers are typically tested for a duration of one (1) second during which a high voltage is applied according to IEC 61800-5-1 standard.
This station is also used to verify placement of the power circuit connections.

Preliminary memory and functional testing

During this test, the unit's on-board communication port is utilized to read internal memory and set aside a portion of memory to track the processes preformed on the drive and its main components. Each tracked process must have been completed successfully to proceed. These include:

- Supplier preformed tests of printed circuit boards with on-board memory.
- Successful drive hi-pot test.

A preliminary test is run to verify:

- Heatsink ground screw presence
- RFI filter jumper setting
- DC bus jumper presence
- EEPROM test
- Product rating verification
- Initial rating verification
- Analog input calibration
- Analog output calibration
- Self test (verification of the display board and control terminal board.)
- Pre-motor test

Codienhaiau.com

Quality Assurance

Unit operation and burn-in testing

Burn-in testing involves four aspects - (I) sample plan, (II) thermal profile, (III) electrical cycling, and (IV) load cycling. Each will vary slightly by the equipment available at each production facility and by the current quality results experienced by each production facility.

(I) Sample Plan

Burn-in is sampled at a rate that varies from 5% to 100%. The rate is based on current quality results for each production facility. Each production facility is required to burn-in at sample rates determined by the model to the left.

(II) Thermal Profile

Constant elevated temperature of 60 °C for two hours during which the drive is subjected to electrical cycling for the entire duration of the thermal profile.

(III) Electrical Cycles

The electrical cycle runs concurrently with the thermal profile. An electrical cycle energizes and de-energizes the drive by connecting and removing AC input power. The drive is energized for the duration of a load cycle (typically 4 minutes) and de-energized to allow the drive power supply to shut down (typically 40 seconds). This cycle repeats continuously during the portions of the thermal profile indicated above. This cycle is repeated continuously during the thermal profile.

(IV) Load Cycles

Drives are connected to an inertial motor load during burn-in. When the drive is energized, the drive is cycled between high speed forward and reverse operations. Load cycles are made at a minimum interval of 10 seconds. Acceleration and deceleration rates are 0.1s (minimum). The rates are selected to maximize transition stress.

Monitoring during burn-in cycle

The drive fault register and drive speed are monitored conditions during the load cycle. A detected fault or failure to attain commanded speed results in a test failure.

Final verification testing

This test validates proper operation after burn-in and prepares the drive settings for customer shipment. The following checks are made:

- DC bus pre-charge check
- Communication port test
- Product model verification
- 7 segment LED display check
- DC charge LED check I
- CPU version check
- DC bus level check
- Fan operation test
- Nominal load characteristic check
- Over current test
- Ground fault trip test
- Brake transistor off check
- Brake transistor on check
- Set factory default configuration

This document provides information regarding the quality assurance processes and procedures that are in place for the manufacturing of Altivar 12. These are in place to monitor and confirm the quality of the product line that has been designed in from the outset.

Odienhaiau.com

Solutions for every stage of your equipment's life cycle

Schneider Electric™ provides services far beyond meeting your immediate needs for application or equipment repair. We take a long-term, holistic approach to determine your facility and operational needs and develop a strategy for improving the performance of your people, systems, and processes.

Schneider Electric provides services from system design and consulting, to maintenance support, modernization of your installation, and project delivery. Schneider Electric provides the people, tools, and processes to help maximize your business's infrastructure.

Our expertise enables you to cut costs, reduce energy consumption, and keep your systems up and running through routine maintenance, added enhancements, and migrations to new state-of-the-art functionality.

> When it comes to your automation equipment, we can help you

- Increase productivity
- Improve reliability and safety
- Mitigate risk and limit downtime
- Keep equipment up to date
- Extend the life of your installed base
- Cut costs and increase savings
- Improve your return on investment

> Start-up and commissioning
Expert installation support to provide assistance in the start-up of your new system. Service includes a comprehensive power-up and diagnostic check on system components to minimize risk and optimize operation.

> Technical training
Training offered on-site, off-site, or online for Schneider Electric automation products taught by professional instructors with up-to-date knowledge of our latest hardware and software.

> Remote technical support
Comprehensive online and phone support from experts specially trained on Schneider Electric drive products, helping to reduce downtime and costs and optimize your system's life cycle.

> On-site technical support
Support service to perform regular maintenance, upgrades, and conversion assistance, small application and programming assistance, on-the-job training, equipment repair, support and troubleshooting, even in emergency situations.

> Preventative maintenance
Maintenance programs to scan for, and proactively detect, potential issues or problems with your automation system to help you avoid the costs of unscheduled downtime and short equipment service life. Also serves to extend the life of your installed base by using our services to properly maintain your equipment.

> Industrial repair services
Repair capabilities for over 400,000 part numbers from more than 2,500 manufacturers at our Greensboro, NC repair facility. Repair is available for both Schneider Electric and non-Schneider Electric equipment.

> Spare parts management
Save money and reduce downtime through our parts management program. An on-site assessment is performed to determine parts and inventory levels needed to maintain proper system operation and reduce downtime and inventory costs.

> Migration and modernization
Realize the productivity benefits of the latest Schneider Electric automation technology by using our assessment tools to identify and implement replacement of your legacy automation products, regardless of brand. We make extensive use of existing hardware and wiring for a cost-effective solution with minimal downtime.

> Software renewals
Access the latest software, firmware, and custom options to ensure you always have the latest functionality available to optimize your system's life cycle.

> Extended warranty
Extend your Schneider Electric standard manufacturer warranty from one year to five years. Protection plans are tailored to your needs reducing costs and out-of-service time.

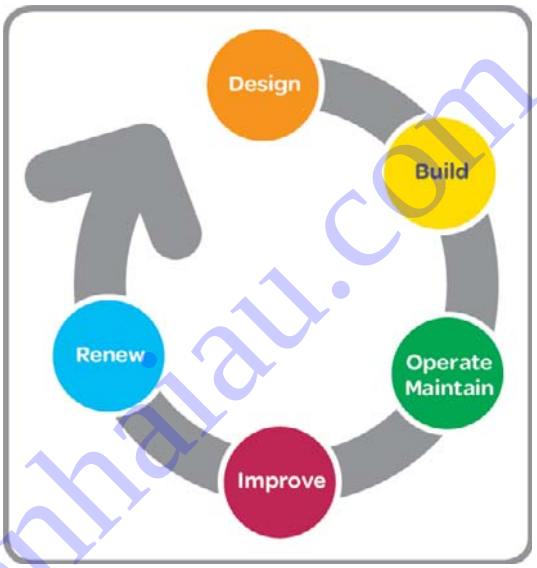

Codienhaiau.com

Talk to someone you can trust

The Altivar family of variable speed AC drives and the Altistart family of soft starts presents the most advanced and user-friendly solutions in the marketplace. Featuring proprietary motor control algorithms to achieve optimal reaction times and complete scalability to match your application requirements for speed, size, and protection, the complete line of Altivar and Altistart products provides the flexibility and performance to:

- Meet the needs of a broad range of industries, including HVAC, pump, material handling, hoisting, packaging and many more.
- Reduce your energy costs using proprietary energy-saving technologies available only from Schneider Electric.
- Improve your up-time by simplifying installation, commissioning and maintenance by providing advanced diagnostics, industry-leading voltage ride thru capability and seismic qualified products.

We also work with you to deliver the benefits of a global service and support of a global service and support organization to further increase the value of working with Schneider Electric. Our product specialists, industry experts, distributors, partners, and the countless other members of the Schneider Electric family are dedicated to helping you make the most of your energy everyday. Contact your local sales representative today to learn how Schneider Electric can improve operational performance and help your business to achieve a competitive advantage. Or visit www.schneider-electric.com

>Drive Product Support Group

For support and assistance, contact the Drive Product Support Group. The Drive Product Support Group is staffed from 8:00 am until 6:00 pm Eastern time to assist with product selection, start-up, and diagnosis of product or application problems.
EMERGENCY Technical phone support is available 24 hours a day, 365 days a year.
Toll Free **1-888-778-2733**
E-mail **drive.products.support@us.schneider-electric.com**
Fax **919-217-6508**

>Schneider Electric Service (On-Site)

The Schneider Electric Services division is committed to providing quality on-site service that consistently meets customer expectations. Services responds to your requests, seven days a week, 24 hours a day.
Phone **1-888-778-2733**

>Schneider Electric Customer Training

Schneider Electric offers a variety of instructor-led skill enhancing and technical product training programs for customers. For a complete list of drives/soft start training with dates, locations, and pricing please call:
Phone **978-975-9306**
Fax **978-975-2821**

>Customer Care Center

(Assist with stock checks, claims, and order management)
To provide additional support, Schneider Electric has rolled out new Technical Service Representatives in local offices which have the strongest needs.
Due to time zone changes and different time operation requirements business operation times vary.
Phone 888-778-2733
Fax 888-329-9773

Codienhaiau.com

Schneider Electric USA, Inc.

Schneider Electric USA, Inc.
8001 Knightdale Blvd.
Knightdale, NC 27545

USA Customer Care Center
Tel: 888-778-2733

The information provided in this documentation contains general descriptions and/or technical characteristics of the performance of the products contained herein. This documentation is not intended as a substitute for and is not to be used for determining suitability or reliability of these products for specific user applications. It is the duty of any such user or integrator to perform the appropriate and complete risk analysis, evaluation and testing of the products with respect to the relevant specific application or use thereof. Neither Schneider Electric nor any of its affiliates or subsidiaries shall be responsible or liable for misuse of the information contained herein.

© 2013 Schneider Electric. All Rights Reserved. Schneider Electric and Altivar are trademarks owned by Schneider Electric Industries SAS or its affiliated companies. All other trademarks are the property of their respective owners.

Design: Schneider Electric
Photos: Schneider Electric

8800CT1301
December 2013 - V1.0

Cocenhaiau.com