- Double acting
- Aluminium barrel
- Comprehensive range bore
- Various optional mountings
- Magnetic and adjustable cushion type as standard

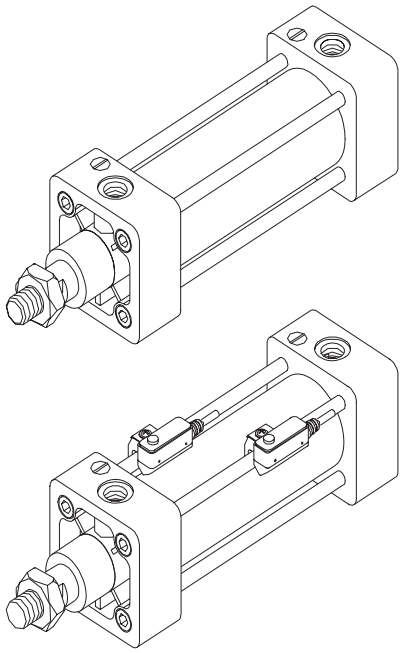

| Symbol | Cyl. bore(mm) | Rod dia(mm) | Port size(PT) | Max.stroke(mm) |
|---|---|---|---|---|
| 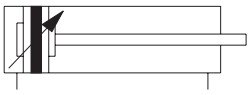 | 40 | 16 | 1/4 | 500 |
| | 50 | 20 | 3/8 | 600 |
| | 63 | 20 | 3/8 | 600 |
| | 80 | 25 | 1/2 | 700 |
| | 100 | 30 | 1/2 | 1,000 |
| | 125 | 35 | 1/2 | 1,000 |
| | 150 | 40 | 3/4 | 1,000 |
| | 180 | 45 | 3/4 | 1,400 |
| | 200 | 50 | 1 | 1,600 |
| | 250 | 60 | 1 | 1,800 |

## Specification

| | |
|---|---|
| Type | Double acting |
| Fulid | Compressed air |
| Working pressure | 1.0 - 9 (bar) |
| Max pressure | 15 (bar) |
| Working temperature | 5 - 60˚C |
| Cushion | Adjustable cushion |

Codienhaiau.com

## Order key

**G D C S - L B - 2 0 0 X 1 0 0 - Y - 2 2 0 V**

**Auto switch**

| | |
|---|---|
| XX | None |
| S | Attached |

**Cylinder bore**

Magnetic type:
40, 50, 63, 80, 100, 150
Non-magnetic type:
125, 150, 180, 200, 250

**Stroke length in mm**

For stroke length see table below

**Voltage (valve mounted type)**

| | |
|---|---|
| 24V | DC 24V |
| 110V | AC 110V |
| 220V | AC 220V |

**Cylinder version**

| | |
|---|---|
| GDC | Double acting, standard |
| VGI | Valve mounted(normal in) type |
| VGO | Valve mounted(normal out) type |
| SGB | Double-ended piston rod type |
| SGR | Adjustable piston rod type |
| SGF | Four-position type |
| SGT | Three-position type |
| SGD | Tandem type |
| SGJ | Bellows protected rod type |

For special type see table next page

**Mountings**

| | |
|---|---|
| XX | Standard |
| LB | Foot bracket |
| FH | Flange(head end) |
| FC | Flange(cap end) |
| TH | Trunnion(head end) |
| TC | Trunnion(cap end) |
| TM | Trunnion(centre) |
| CA | Clevis(1 hole) |
| CB | Clevis(2 hole) |

**Rod option**

| | |
|---|---|
| Y | Clevis Y |
| I | Clevis I |

## Cylinder stroke lengths

● Standard stroke lengths in mm  Non standard stroke lenths in mm

| Cyl. bore(mm) | 25 | 50 | 75 | 100 | 125 | 150 | 200 | 250 | 300 | 350 | 400 | 450 | 500 | 600 | 700 | 1000 | 1400 | 1600 | 1800 |
|---|---|---|---|---|---|---|---|---|---|---|---|---|---|---|---|---|---|---|---|
| 40 | ● | ● | ● | ● | ● | ● | ● | ● | ● | ● | ● | | ● | | | | | | |
| 50 | ● | ● | ● | ● | ● | ● | ● | ● | ● | ● | ● | | ● | | | | | | |
| 63 | ● | ● | ● | ● | ● | ● | ● | ● | ● | ● | ● | | ● | | | | | | |
| 80 | ● | ● | ● | ● | ● | ● | ● | ● | ● | ● | ● | | ● | | | | | | |
| 100 | ● | ● | ● | ● | ● | ● | ● | ● | ● | ● | ● | | ● | | | | | | |
| 125 | | | | | | | | | | | | | | | | | | | |
| 150 | | | | | | | | | | | | | | | | | | | |
| 180 | | | | | | | | | | | | | | | | | | | |
| 200 | | | | | | | | | | | | | | | | | | | |
| 250 | | | | | | | | | | | | | | | | | | | |

Codienhaiau.com

## Special cylinder version

| Cyl. Version | ● Available cylider bore in mm per order | | | | | | | | | |
|---|---|---|---|---|---|---|---|---|---|---|
| | 40 | 50 | 63 | 80 | 100 | 125 | 150 | 180 | 200 | 250 |
| VGI, VGO | | ● | ● | ● | ● | | | | | |
| SGB | ● | ● | ● | ● | ● | ● | ● | ● | ● | ● |
| SGR | ● | ● | ● | ● | ● | ● | ● | ● | ● | ● |
| SGF | ● | ● | ● | ● | ● | ● | | | | |
| SGT | ● | ● | ● | ● | ● | ● | | | | |
| SGD | ● | ● | ● | ● | ● | ● | | | | |
| SGJ | ● | ● | ● | ● | ● | ● | ● | ● | ● | ● |

## Mountings or rod option range

| Item | ● Available cylider bore in mm per mountings or rod option | | | | | | | | | |
|---|---|---|---|---|---|---|---|---|---|---|
| | 40 | 50 | 63 | 80 | 100 | 125 | 150 | 180 | 200 | 250 |
| LB(LR, LH) | ● | ● | ● | ● | ● | ● | ● | ● | ● | ● |
| CA | ● | ● | ● | ● | ● | ● | ● | ● | ● | ● |
| CB | ● | ● | ● | ● | ● | ● | ● | ● | ● | ● |
| FA(FB) | ● | ● | ● | ● | ● | ● | ● | ● | ● | ● |
| TC(TR, TH) | ● | ● | ● | ● | ● | ● | ● | ● | ● | ● |
| Y | ● | ● | ● | ● | ● | ● | ● | ● | ● | ● |
| I | ● | ● | ● | ● | ● | ● | ● | ● | ● | ● |
| Valve mounted | | ● | ● | ● | ● | | | | | |
| Auto switch | ● | ● | ● | ● | ● | | ● | | | |

Codienhaiau.com

## Dimensions, basic cylinder (magnetic Ø40~Ø100)

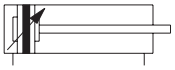

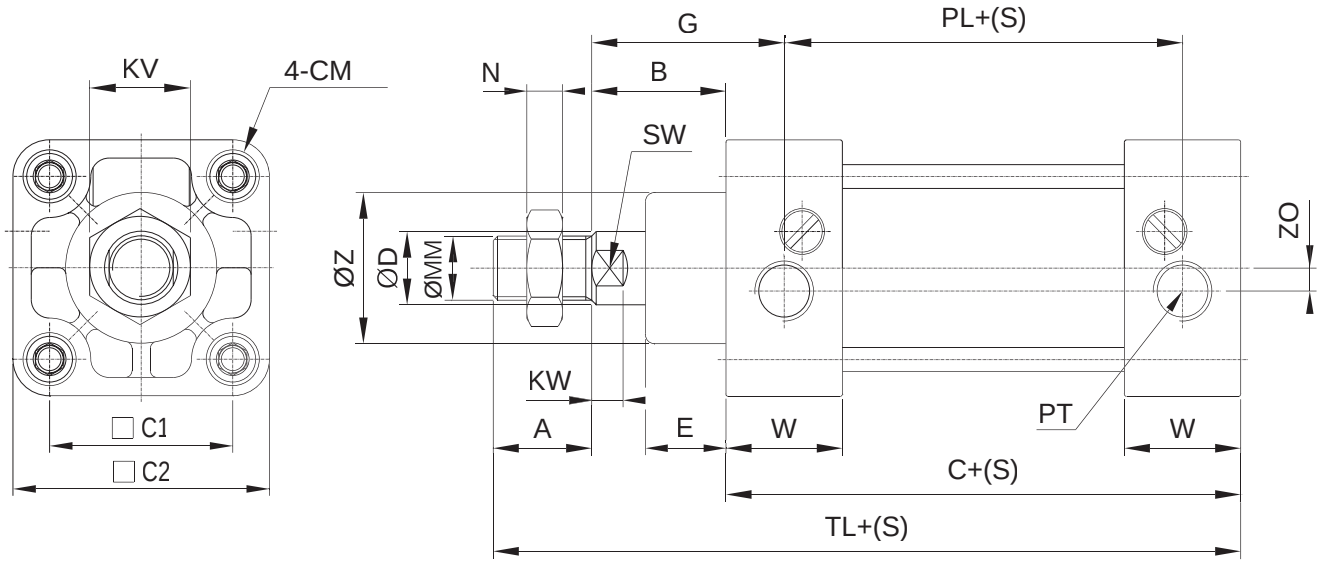


| Ø | C1 | C2 | A | B | C | ØD | E | G | KV | KW | ØMM | N |
|---|---|---|---|---|---|---|---|---|---|---|---|---|
| 40 | 40 | 56 | 22 | 30 | 90 | 16 | 18 | 43 | 22 | 7 | M14xP1.5 | 8 |
| 50 | 48 | 67 | 28 | 35 | 104 | 20 | 23 | 48.5 | 27 | 10 | M18xP1.5 | 11 |
| 63 | 59 | 78 | 28 | 35 | 104 | 20 | 23 | 48.5 | 27 | 10 | M18xP1.5 | 11 |
| 80 | 74 | 98 | 36 | 45 | 113 | 25 | 28 | 58 | 32 | 11 | M22xP1.5 | 13 |
| 100 | 90 | 116 | 45 | 49 | 124 | 30 | 33 | 67 | 38 | 13 | M26xP1.5 | 16 |

| Ø | PL | PT | SW | TL | W | ØZ | ZO | CM |
|---|---|---|---|---|---|---|---|---|
| 40 | 64 | 1/4 | 14 | 142 | 26 | 33 | 5 | M6xP1.0 |
| 50 | 77 | 3/8 | 18 | 167 | 31 | 40 | 6.3 | M8xP1.25 |
| 63 | 77 | 3/8 | 18 | 167 | 31 | 40 | 6.3 | M8xP1.25 |
| 80 | 83 | 1/2 | 22 | 192 | 34 | 44 | 8 | M12xP1.75 |
| 100 | 90 | 1/2 | 27 | 219 | 36 | 50 | 8 | M12xP1.75 |

* S : stroke

Codienhaiau.com

## Foot bracket(LB)

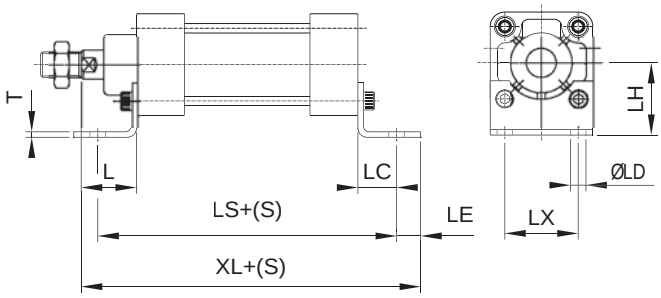


| Ø | L | LC | ØLD | LE | LH | LS | LX | T | XL |
|---|---|---|---|---|---|---|---|---|---|
| 40 | 30 | 21 | 8.5 | 13 | 40 | 132 | 40 | 3 | 154 |
| 50 | 35 | 23 | 10.5 | 15 | 45 | 150 | 45 | 3 | 177 |
| 63 | 35 | 25 | 10.5 | 16 | 53 | 154 | 60 | 3.5 | 180 |
| 80 | 43 | 34 | 13 | 16 | 63 | 181 | 71 | 4 | 206 |
| 100 | 50 | 40 | 15 | 16 | 75 | 204 | 85 | 4 | 230 |

* S : stroke

## Clevis(CA)

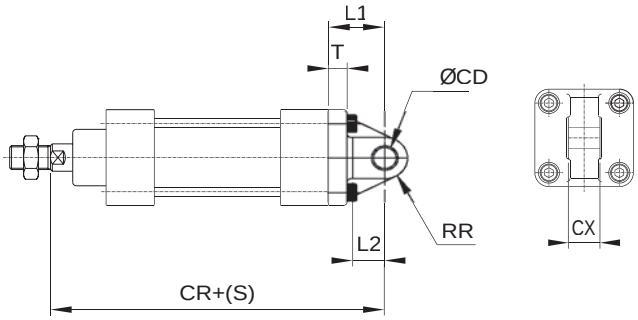


| Ø | CR | L1 | L2 | RR | T | ØCD | CX |
|---|---|---|---|---|---|---|---|
| 40 | 150 | 30 | 17 | 12 | 10 | 12.1 | 18 |
| 50 | 176 | 37 | 17 | 12 | 12 | 12.1 | 18 |
| 63 | 183 | 44 | 21 | 16 | 14 | 16.1 | 22 |
| 80 | 207 | 51 | 25 | 20 | 16 | 20.1 | 28 |
| 100 | 232 | 58 | 30 | 25 | 18 | 25.1 | 32 |

* S : stroke

## Clevis(CB)

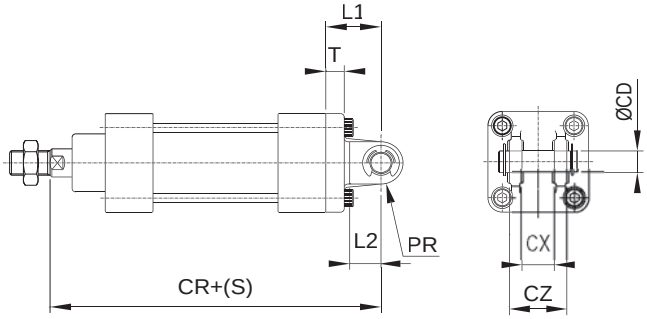


| Ø | CR | L1 | L2 | RR | T | ØCD | CX | CZ |
|---|---|---|---|---|---|---|---|---|
| 40 | 150 | 30 | 17 | 12 | 10 | 12.1 | 18 | 36 |
| 50 | 176 | 37 | 17 | 12 | 12 | 12.1 | 18 | 36 |
| 63 | 183 | 44 | 21 | 16 | 14 | 16.1 | 22 | 44 |
| 80 | 207 | 51 | 25 | 20 | 16 | 20.1 | 28 | 56 |
| 100 | 232 | 58 | 30 | 25 | 18 | 25.1 | 32 | 64 |

* S : stroke

Codienhaiau.com

## Flange(FH, FC)

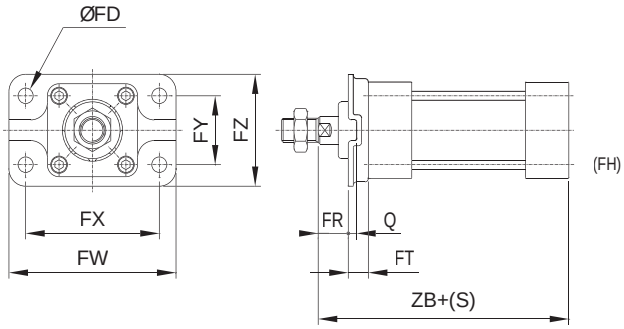


| Ø | ØFD | FW | FX | FY | FZ | FR | FT | Q | ZB |
|---|---|---|---|---|---|---|---|---|---|
| 40 | 9 | 100 | 80 | 40 | 65 | 18 | 12 | 5 | 120 |
| 50 | 11 | 112 | 90 | 45 | 78 | 21 | 14 | 6 | 139 |
| 63 | 11 | 135 | 112 | 60 | 92 | 21 | 14 | 6 | 139 |
| 80 | 13 | 160 | 132 | 71 | 114 | 25 | 18 | 7 | 158 |
| 100 | 16 | 180 | 150 | 85 | 128 | 30 | 20 | 8 | 174 |

* S : stroke

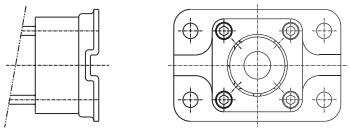


## Trunnion(TH, TM, TC)

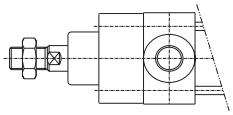


| Ø | T | TA | ØTD | TX | TY |
|---|---|---|---|---|---|
| 40 | 30 | 16 | 16 | 63 | 57 |
| 50 | 30 | 18 | 18 | 80 | 73 |
| 63 | 35 | 20 | 20 | 90 | 86 |
| 80 | 40 | 25 | 25 | 112 | 107 |
| 100 | 45 | 32 | 32 | 140 | 130 |

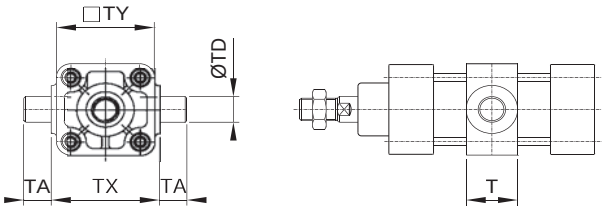


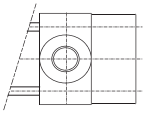


Codienhaiau.com

## Dimensions, basic cylinder (non-magnetic:Ø125~Ø250)

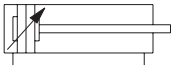

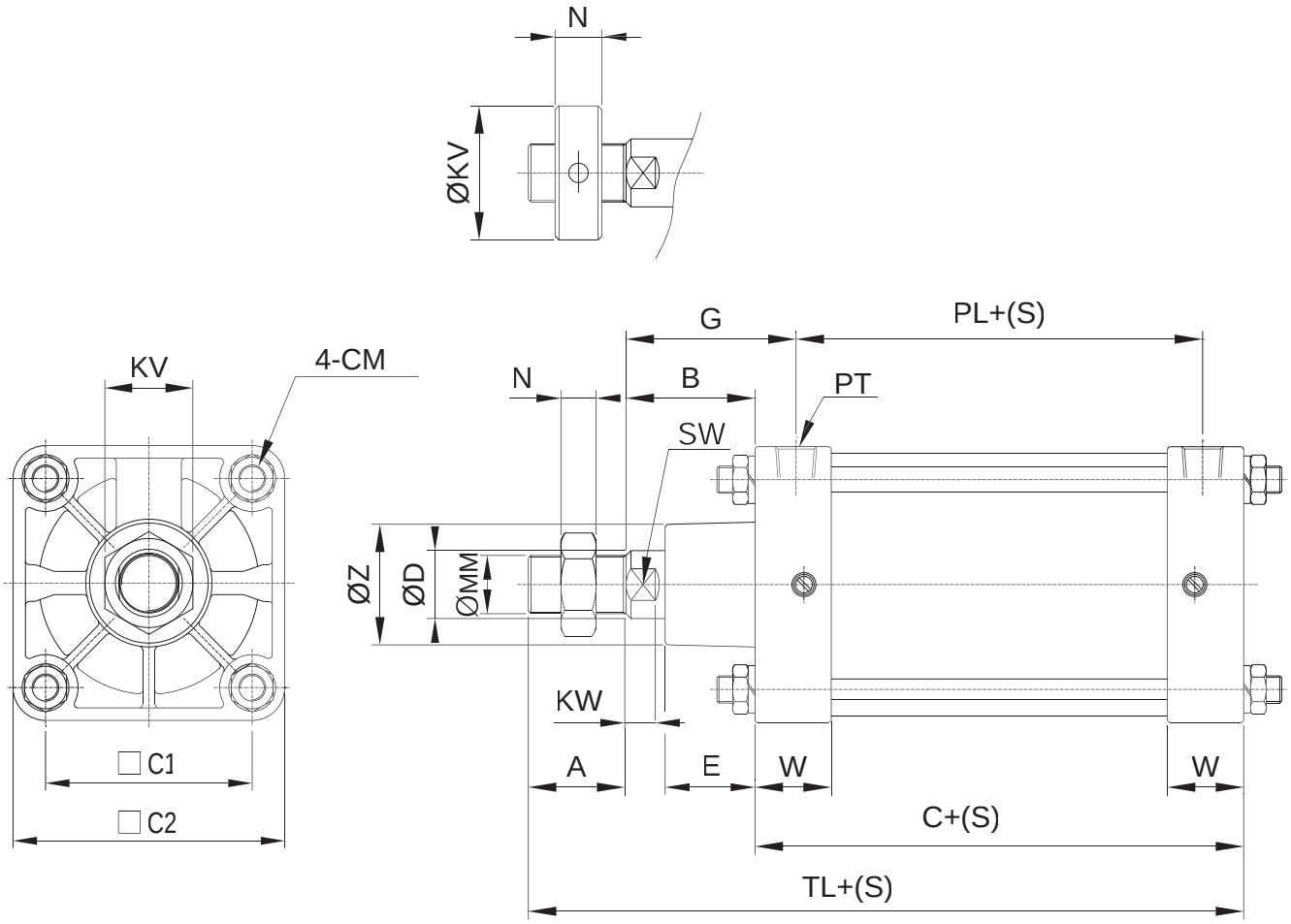


| Ø | C1 | C2 | A | B | C | ØD | E | G | KV | ØKV | KW | MM |
|---|---|---|---|---|---|---|---|---|---|---|---|---|
| 125 | 108 | 142 | 50 | 66 | 131 | 35 | 46 | 87 | 41 | - | 15 | M30xP1.5 |
| 150 | 132 | 170 | 55 | 71 | 144 | 40 | 46 | 91 | 50 | - | 20 | M36xP1.5 |
| 180 | 157 | 204 | 63 | 75 | 162 | 45 | 50 | 97.5 | - | 69 | 20 | M40xP1.5 |
| 200 | 178 | 228 | 80 | 85 | 180 | 50 | 60 | 110 | - | 78 | 20 | M45xP1.5 |
| 250 | 218 | 272 | 100 | 105 | 206 | 60 | 75 | 130 | - | 90 | 25 | M55xP2 |

| Ø | N | PL | PT | SW | TL | W | ØZ | CM |
|---|---|---|---|---|---|---|---|---|
| 125 | 18 | 95 | 1/2 | 31 | 247 | 39 | 62 | M14xP1.5 |
| 150 | 18 | 104 | 3/4 | 37 | 270 | 40 | 80 | M16xP1.5 |
| 180 | 24 | 117 | 3/4 | 41 | 300 | 45 | 90 | M18xP1.5 |
| 200 | 25 | 130 | 1 | 46 | 345 | 50 | 100 | M20xP1.5 |
| 250 | 30 | 156 | 1 | 56 | 411 | 50 | 115 | M24xP1.5 |

* S : stroke

Codienhaiau.com

## Foot bracket( LB)

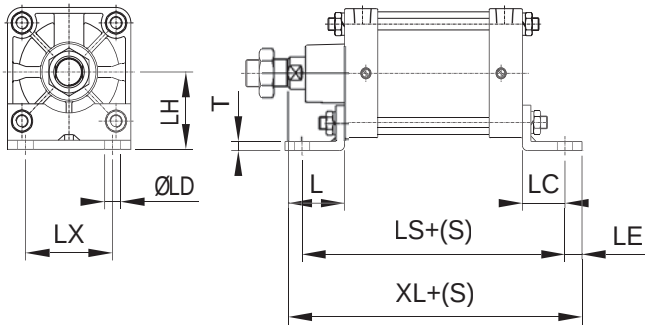


| Ø | L | LC | ØLD | LE | LH | LS | LX | T | XL |
|---|---|---|---|---|---|---|---|---|---|
| 125 | 66 | 50 | 18 | 20 | 85 | 231 | 100 | 10 | 267 |
| 150 | 71 | 55 | 20 | 20 | 105 | 254 | 118 | 10 | 290 |
| 180 | 75 | 65 | 22 | 23 | 120 | 292 | 132 | 12 | 325 |
| 200 | 85 | 75 | 24 | 25 | 135 | 330 | 170 | 14 | 365 |
| 250 | 105 | 75 | 26 | 28 | 160 | 356 | 200 | 16 | 414 |

* S : stroke

## Clevis(CA)

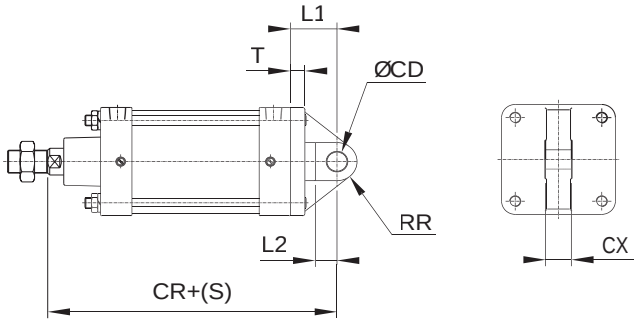


| Ø | CR | L1 | L2 | RR | T | ØCD | CX |
|---|---|---|---|---|---|---|---|
| 125 | 255 | 58 | 27 | 25 | 18 | 25.1 | 32 |
| 150 | 280 | 65 | 35 | 30 | 20 | 30.1 | 38 |
| 180 | 317 | 80 | 50 | 40 | 25 | 40.1 | 50 |
| 200 | 360 | 95 | 48 | 48 | 30 | 45 | 55 |
| 250 | 421 | 110 | 55 | 55 | 35 | 50.1 | 60 |

* S : stroke

## Clevis(CB)

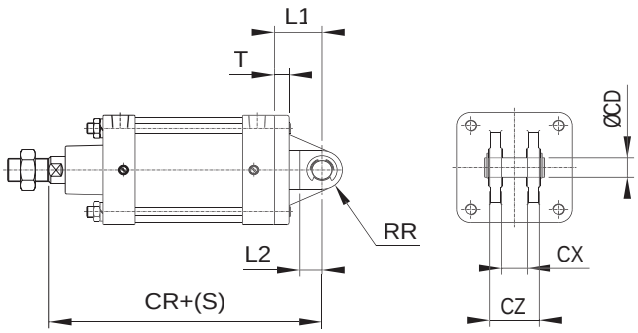


| Ø | CR | L1 | L2 | RR | T | ØCD | CX | CZ |
|---|---|---|---|---|---|---|---|---|
| 125 | 255 | 58 | 27 | 25 | 18 | 25.1 | 32 | 64 |
| 150 | 280 | 65 | 35 | 30 | 20 | 30.1 | 38 | 88 |
| 180 | 317 | 80 | 50 | 40 | 25 | 40.1 | 50 | 100 |
| 200 | 360 | 95 | 48 | 48 | 30 | 45 | 55 | 135 |
| 250 | 421 | 110 | 55 | 55 | 35 | 50.1 | 60 | 155 |

* S : stroke

Codienhaiau.com

## Flange(FH, FC)

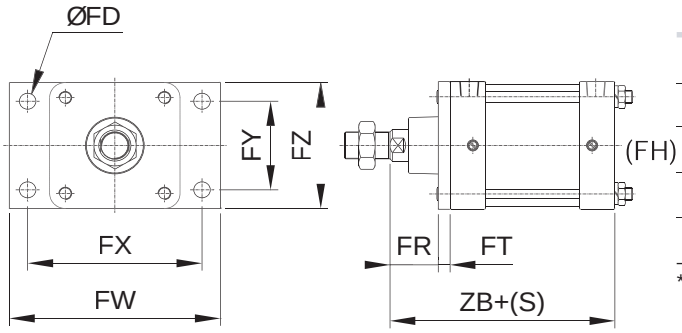


| Ø | ØFD | FW | FX | FY | FZ | FR | FT | ZB |
|---|---|---|---|---|---|---|---|---|
| 125 | 18 | 230 | 190 | 100 | 142 | 53 | 13 | 197 |
| 150 | 20 | 270 | 228 | 115 | 170 | 52 | 19 | 215 |
| 180 | 22 | 310 | 265 | 132 | 204 | 50 | 25 | 237 |
| 200 | 22 | 320 | 275 | 178 | 228 | 60 | 25 | 265 |
| 250 | 26 | 382 | 330 | 220 | 272 | 80 | 25 | 311 |

* S : stroke

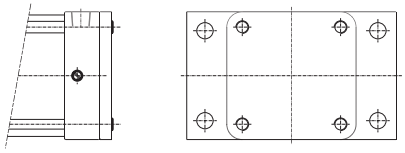

(FC)

## Trunnion(TH, TM, TC)

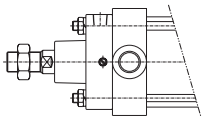

(TH)

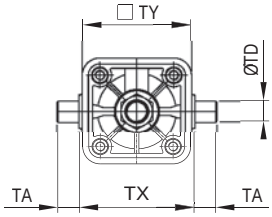


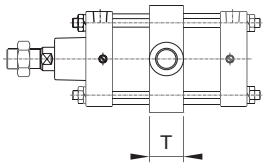


(TM)

| Ø | T | TA | ØTD | TX | TY |
|---|---|---|---|---|---|
| 125 | 50 | 32 | 32 | 170 | 160 |
| 150 | 60 | 45 | 40 | 200 | 190 |
| 180 | 65 | 45 | 45 | 236 | 226 |
| 200 | 70 | 55 | 55 | 260 | 250 |
| 250 | 80 | 60 | 60 | 320 | 310 |

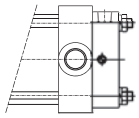

(TC)

Codienhaiau.com

## Dimensions, basic cylinder(magnetic: Ø150)

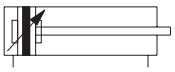

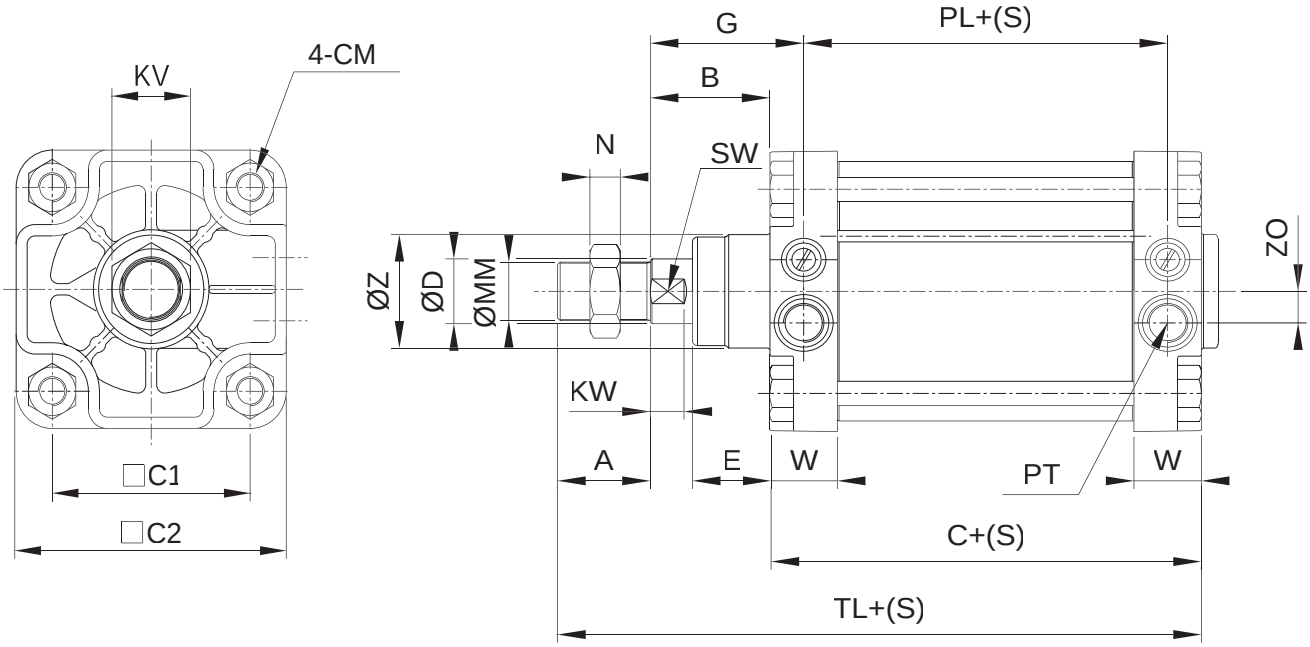


| Ø | C1 | C2 | A | B | C | ØD | E | G | KV | KW | MM | N |
|---|---|---|---|---|---|---|---|---|---|---|---|---|
| 150 | 126 | 173 | 55 | 71 | 156 | 40 | 46 | 91 | 50 | 20 | M36xP1.5 | 18 |

| Ø | PL | PT | SW | TL | W | ØZ | CM |
|---|---|---|---|---|---|---|---|
| 150 | 116 | 3/4 | 37 | 282 | 40 | 70 | M16xP2.0 |

* S : stroke

Codienhaiau.com

## Foot brack et(LB)

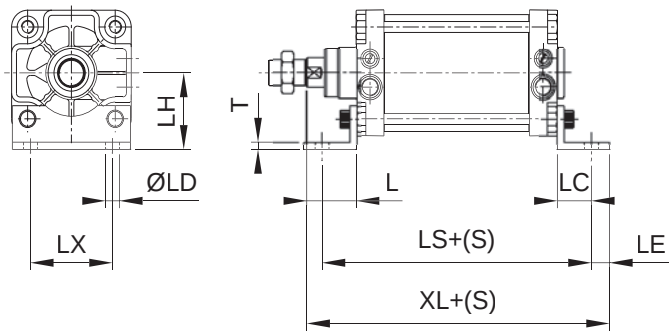


| Ø | L | LC | ØLD | LE | LH | LS | LX | T | XL |
|---|---|---|---|---|---|---|---|---|---|
| 150 | 71 | 49 | 20 | 26 | 105 | 254 | 118 | 10 | 302 |

* S : stroke

## Clevis(CA)

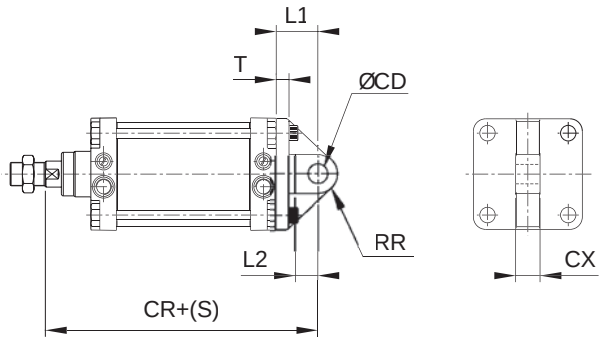


| Ø | CR | L1 | L2 | RR | T | ØCD | CX |
|---|---|---|---|---|---|---|---|
| 150 | 292 | 65 | 35 | 30 | 20 | 30.1 | 38 |

* S : stroke

## Clevis(CB)

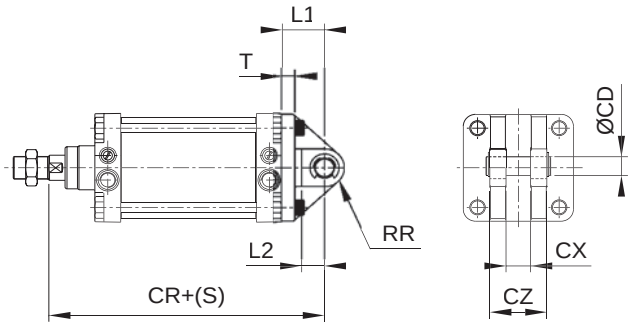


| Ø | CR | L1 | L2 | RR | T | ØCD | CX | CZ |
|---|---|---|---|---|---|---|---|---|
| 150 | 292 | 65 | 35 | 30 | 20 | 30.1 | 38 | 88 |

* S : stroke

Codienhaau.com

## Flange(FH, FC)

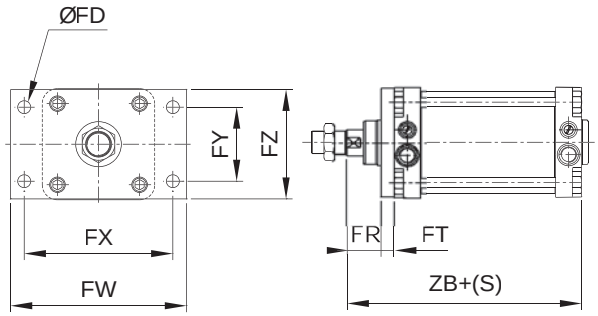


(FH)

| Ø | ØFD | FW | FX | FY | FZ | FR | FT | ZB |
|---|---|---|---|---|---|---|---|---|
| 150 | 20 | 270 | 228 | 115 | 170 | 52 | 19 | 227 |

* S : stroke

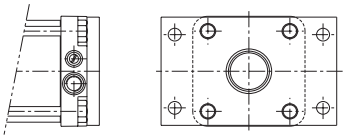

(FC)

## Trunnion(TH, TM, TC)

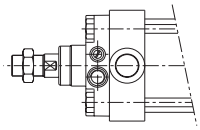

(TH)

| Ø | T | TA | ØTD | TX | TY |
|---|---|---|---|---|---|
| 150 | 60 | 45 | 40 | 200 | 190 |

* S : stroke

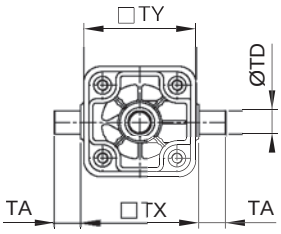


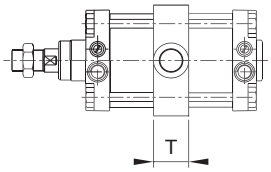


(TM)

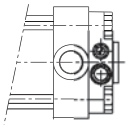

(TC)

Codienhaiau.com

## Dimensions, valve mounted cylinder(Ø50~Ø100)

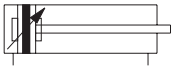

VGI, VGO

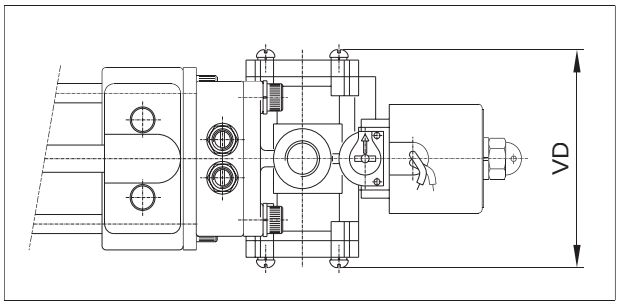


VGD

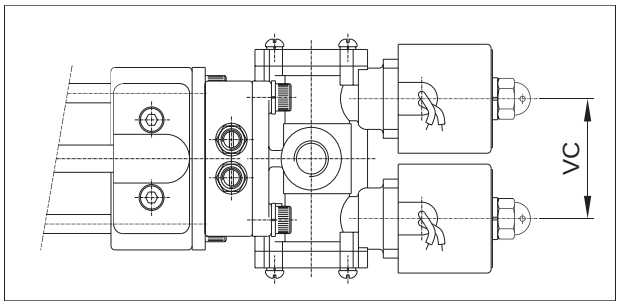


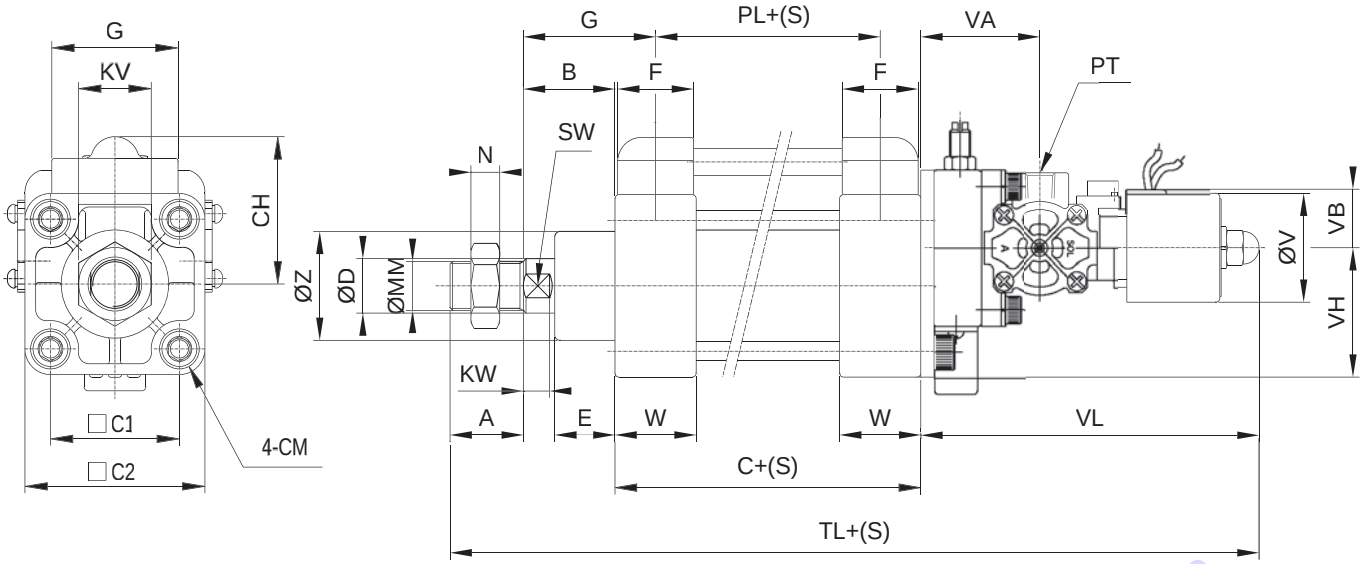


| Ø | C1 | C2 | A | B | C | CH | ØD | E | F | G | H | KV | KW | MM | N |
|---|---|---|---|---|---|---|---|---|---|---|---|---|---|---|---|
| 50 | 48 | 67 | 28 | 35 | 104 | 54.5 | 20 | 23 | 29 | 48.5 | 47 | 27 | 10 | M18xP1.5 | 11 |
| 63 | 59 | 78 | 28 | 35 | 104 | 60 | 20 | 23 | 29 | 48.5 | 47 | 27 | 10 | M18xP1.5 | 11 |
| 80 | 74 | 98 | 36 | 43 | 113 | 70 | 25 | 28 | 33 | 58 | 58 | 32 | 11 | M22xP1.5 | 13 |
| 100 | 90 | 116 | 45 | 50 | 124 | 79 | 30 | 33 | 33 | 67 | 58 | 38 | 13 | M26xP1.5 | 16 |

| Ø | PL | PT | SW | TL | W | ØZ | CM | ØV | VA | VB | VC | VD | VH | VL |
|---|---|---|---|---|---|---|---|---|---|---|---|---|---|---|
| 50 | 77 | 1/4 | 18 | 291 | 31 | 40 | M8xP1.25 | 40 | 40.5 | 21.5 | 44 | 80 | 40.5 | 124 |
| 63 | 77 | 1/4 | 18 | 291 | 31 | 40 | M8xP1.25 | 40 | 40.5 | 21.5 | 44 | 80 | 55.5 | 124 |
| 80 | 83 | 1/4 | 22 | 316 | 34 | 45 | M12xP1.75 | 40 | 40.5 | 21.5 | 44 | 80 | 63 | 124 |
| 100 | 90 | 1/4 | 27 | 343 | 36 | 50 | M12xP1.75 | 40 | 40.5 | 21.5 | 44 | 80 | 73.5 | 124 |

* S : Stroke

Codienhaiau.com

## Foot bracket(LB)

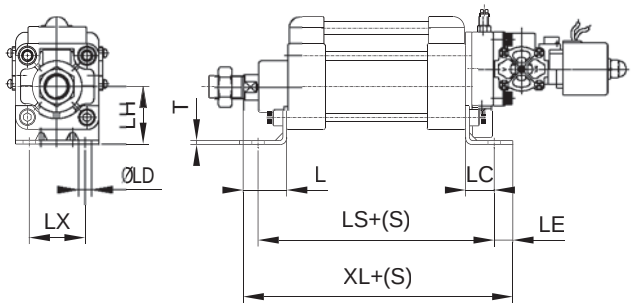


| Ø | L | LC | ØLD | LE | LH | LS | LX | T | XL |
|---|---|---|---|---|---|---|---|---|---|
| 50 | 35 | 23 | 10.5 | 15 | 45 | 150 | 45 | 3 | 177 |
| 63 | 35 | 25 | 10.5 | 16 | 53 | 154 | 60 | 3.5 | 180 |
| 80 | 43 | 34 | 13 | 16 | 63 | 181 | 71 | 4 | 206 |
| 100 | 50 | 40 | 15 | 16 | 75 | 204 | 85 | 4 | 230 |

* **S : stroke**

## Flange(FH)

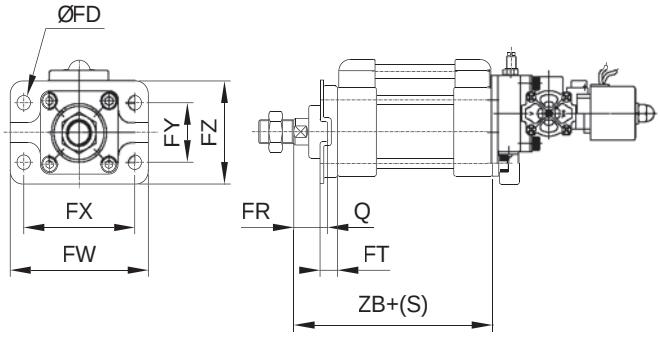


| Ø | ØFD | FW | FX | FY | FZ | FR | FT | Q | ZB |
|---|---|---|---|---|---|---|---|---|---|
| 50 | 11 | 112 | 90 | 45 | 78 | 21 | 14 | 6 | 139 |
| 63 | 11 | 135 | 112 | 60 | 92 | 21 | 14 | 6 | 139 |
| 80 | 13 | 160 | 132 | 71 | 114 | 25 | 18 | 7 | 158 |
| 100 | 16 | 180 | 150 | 85 | 128 | 29 | 20 | 8 | 174 |

* **S : stroke**

## Trunnion(TH, TM, TC)

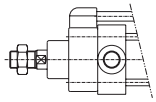

(TH)

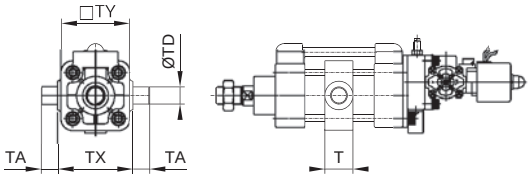


(TM)

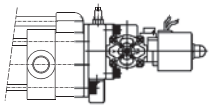

(TC)

| Ø | T | TA | ØTD | TX | TY |
|---|---|---|---|---|---|
| 50 | 30 | 18 | 18 | 80 | 73 |
| 63 | 35 | 20 | 20 | 90 | 86 |
| 80 | 40 | 25 | 25 | 112 | 107 |
| 100 | 45 | 32 | 32 | 140 | 130 |

Codienhaiau.com

## Dimensions, double-ended piston rod cylinder(Ø40~Ø250)

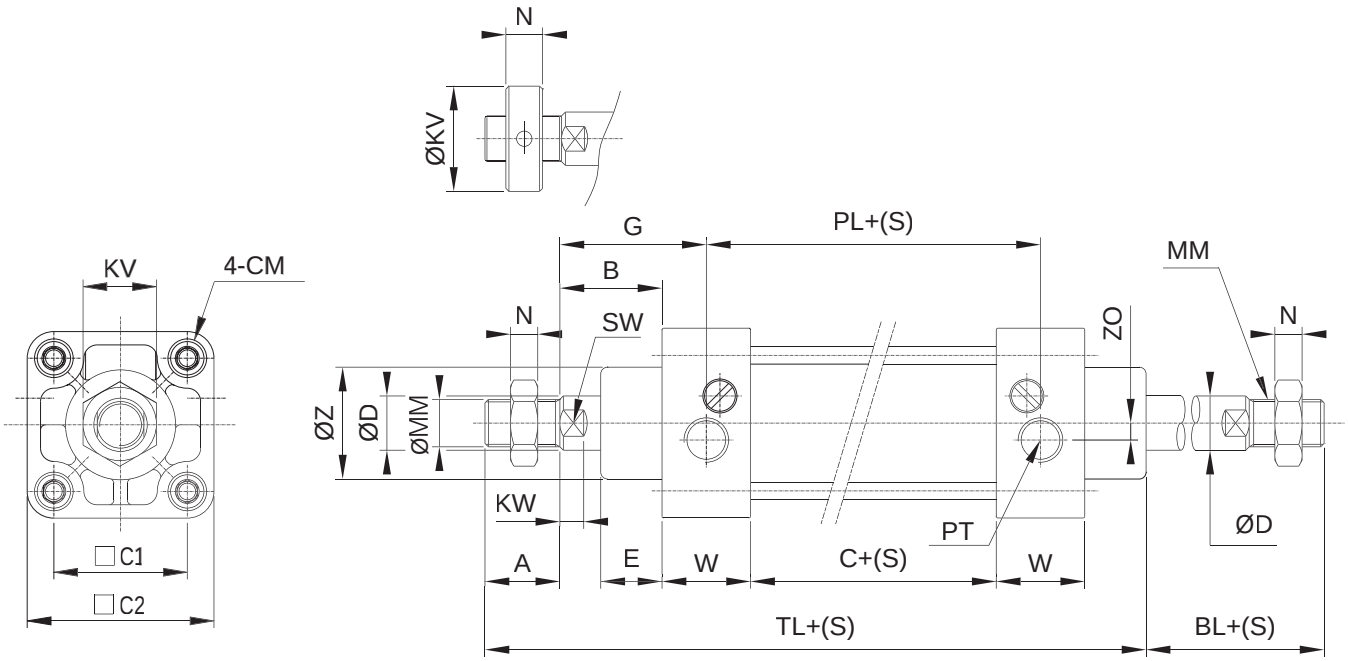


| Ø | C1 | C2 | A | B | BL | C | ØD | E | G | KV | ØKV | KW | MM |
|---|---|---|---|---|---|---|---|---|---|---|---|---|---|
| 40 | 40 | 56 | 22 | 30 | 34 | 38 | 16 | 18 | 43 | 22 | - | 7 | M14xP1.5 |
| 50 | 48 | 67 | 28 | 35 | 40 | 42 | 20 | 23 | 48.5 | 27 | - | 10 | M18xP1.5 |
| 63 | 59 | 78 | 28 | 35 | 40 | 42 | 20 | 23 | 48.5 | 27 | - | 10 | M18xP1.5 |
| 80 | 74 | 98 | 36 | 43 | 51 | 45 | 25 | 28 | 58 | 32 | - | 11 | M22xP1.5 |
| 100 | 90 | 116 | 45 | 50 | 62 | 52 | 30 | 33 | 67 | 38 | - | 13 | M26xP1.5 |
| 125 | 108 | 142 | 50 | 66 | 70 | 53 | 35 | 46 | 87 | 41 | - | 15 | M30xP1.5 |
| 150 | 132 | 170 | 55 | 71 | 80 | 64 | 40 | 46 | 91 | 50 | - | 15 | M36xP1.5 |
| 180 | 157 | 204 | 63 | 75 | 88 | 72 | 45 | 50 | 97.5 | - | 69 | 15 | M40xP1.5 |
| 200 | 178 | 228 | 80 | 85 | 105 | 80 | 50 | 60 | 110 | - | 78 | 15 | M45xP1.5 |
| 250 | 218 | 272 | 100 | 105 | 130 | 106 | 60 | 75 | 130 | - | 90 | 15 | M55xP2 |

| Ø | N | PL | PT | SW | TL | W | ØZ | ZO | CM |
|---|---|---|---|---|---|---|---|---|---|
| 40 | 8 | 64 | 1/4 | 14 | 160 | 26 | 33 | 5 | M6xP1.0 |
| 50 | 11 | 77 | 3/8 | 18 | 190 | 31 | 40 | 6.3 | M8xP1.25 |
| 63 | 11 | 77 | 3/8 | 18 | 109 | 31 | 40 | 6.3 | M8xP1.25 |
| 80 | 13 | 83 | 1/2 | 22 | 220 | 34 | 45 | 8 | M12xP1.75 |
| 100 | 16 | 90 | 1/2 | 27 | 252 | 36 | 50 | 8 | M12xP1.75 |
| 125 | 18 | 95 | 1/2 | 31 | 293 | 39 | 62 | - | M14xP1.5 |
| 150 | 18 | 104 | 3/4 | 37 | 316 | 40 | 80 | - | M16xP1.5 |
| 180 | 24 | 117 | 3/4 | 41 | 350 | 45 | 90 | - | M18xP1.5 |
| 200 | 25 | 130 | 1 | 46 | 405 | 50 | 100 | - | M20xP1.5 |
| 250 | 30 | 156 | 1 | 56 | 486 | 50 | 115 | - | M24xP1.5 |

* S : stroke

Codienhaiau.com

## Dimensions, adjustable piston rod cylinder (Ø40~Ø250)

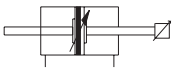

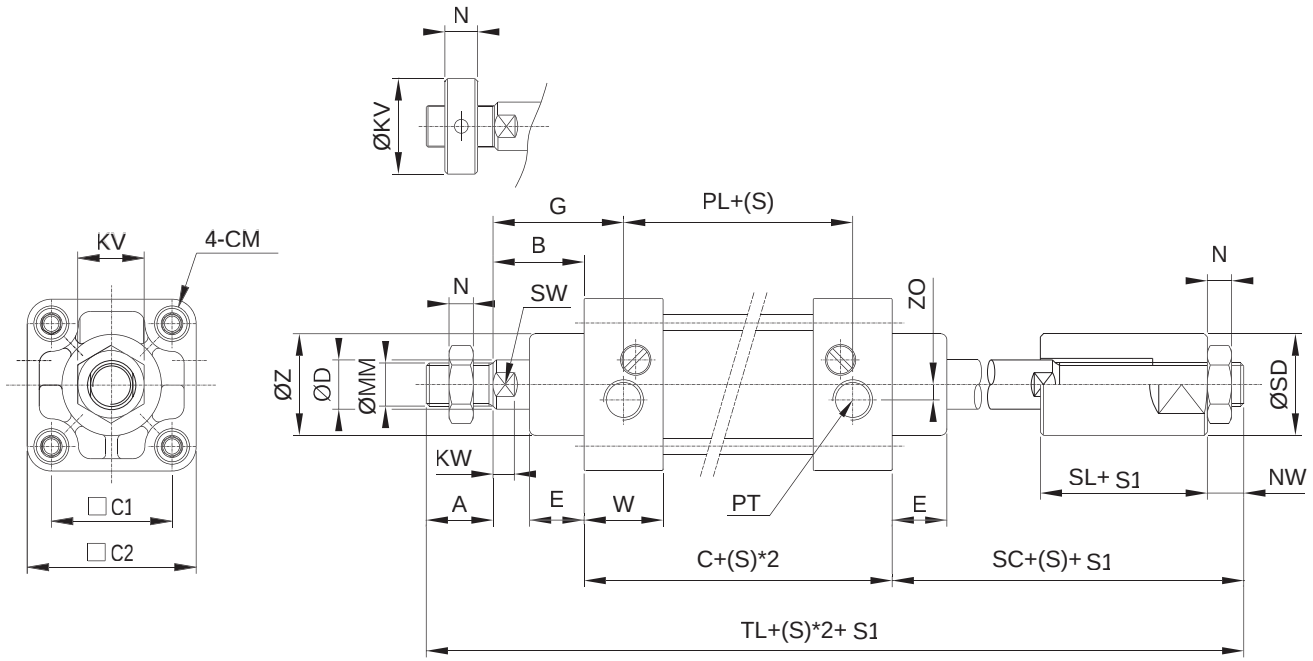


| Ø | C1 | C2 | A | B | C | ØD | E | G | KV | ØKV | KW | MM | N |
|---|---|---|---|---|---|---|---|---|---|---|---|---|---|
| 40 | 40 | 56 | 22 | 30 | 90 | 16 | 18 | 43 | 22 | - | 7 | M14xP1.5 | 8 |
| 50 | 48 | 67 | 28 | 35 | 104 | 20 | 23 | 48.5 | 27 | - | 10 | M18xP1.5 | 11 |
| 63 | 59 | 78 | 28 | 35 | 104 | 20 | 23 | 48.5 | 27 | - | 10 | M18xP1.5 | 11 |
| 80 | 74 | 98 | 36 | 43 | 113 | 25 | 28 | 60 | 32 | - | 11 | M22xP1.5 | 13 |
| 100 | 90 | 116 | 45 | 50 | 124 | 30 | 33 | 66 | 38 | - | 13 | M26xP1.5 | 16 |
| 125 | 108 | 142 | 50 | 66 | 131 | 35 | 46 | 85.5 | 46 | - | 15 | M30xP1.5 | 18 |
| 150 | 132 | 170 | 55 | 71 | 144 | 40 | 46 | 91 | 50 | - | 15 | M36xP1.5 | 18 |
| 180 | 157 | 204 | 63 | 75 | 162 | 45 | 50 | 97.5 | - | 69 | 15 | M40xP1.5 | 24 |
| 200 | 178 | 228 | 80 | 85 | 180 | 50 | 60 | 110 | - | 78 | 15 | M45xP1.5 | 25 |
| 250 | 218 | 272 | 100 | 105 | 206 | 60 | 75 | 130 | - | 90 | 15 | M55xP2 | 30 |

| Ø | NW | PL | PT | SC | ØSD | SL | SW | TL | W | ØZ | ZO | CM |
|---|---|---|---|---|---|---|---|---|---|---|---|---|
| 40 | 12 | 64 | 1/4 | 60 | 33 | 30 | 14 | 202 | 26 | 33 | 5 | M6xP1.0 |
| 50 | 15 | 77 | 3/8 | 72 | 40 | 34 | 18 | 239 | 31 | 40 | 6.3 | M8xP1.25 |
| 63 | 15 | 77 | 3/8 | 72 | 40 | 34 | 18 | 239 | 31 | 40 | 6.3 | M8xP1.25 |
| 80 | 20 | 83 | 1/2 | 89 | 44 | 41 | 22 | 281 | 34 | 45 | 8 | M12xP1.75 |
| 100 | 22 | 90 | 1/2 | 102 | 50 | 47 | 27 | 321 | 36 | 50 | 8 | M12xP1.75 |
| 125 | 25 | 95 | 1/2 | 126 | 62 | 55 | 31 | 373 | 39 | 62 | - | M14xP1.5 |
| 150 | 28 | 104 | 3/4 | 139 | 80 | 65 | 37 | 409 | 40 | 80 | - | M16xP1.5 |
| 180 | 34 | 117 | 3/4 | 154 | 90 | 70 | 41 | 454 | 45 | 90 | - | M18xP1.5 |
| 200 | 38 | 130 | 1 | 173 | 100 | 75 | 46 | 518 | 50 | 100 | - | M20xP1.5 |
| 250 | 45 | 156 | 1 | 210 | 115 | 90 | 56 | 621 | 50 | 115 | - | M24xP1.5 |

* S : stroke
* S1: adjustable range

Cbdienhaiau.com

## Dimensions, four-position cylinder (Ø40~Ø125)

Example) If you order us a SGF model [bore Ø50, 1st step:100mm(S1), 2nd step:200mm(S2)]:

- SGF 50 x 100 x 200. For more options see page 2-69

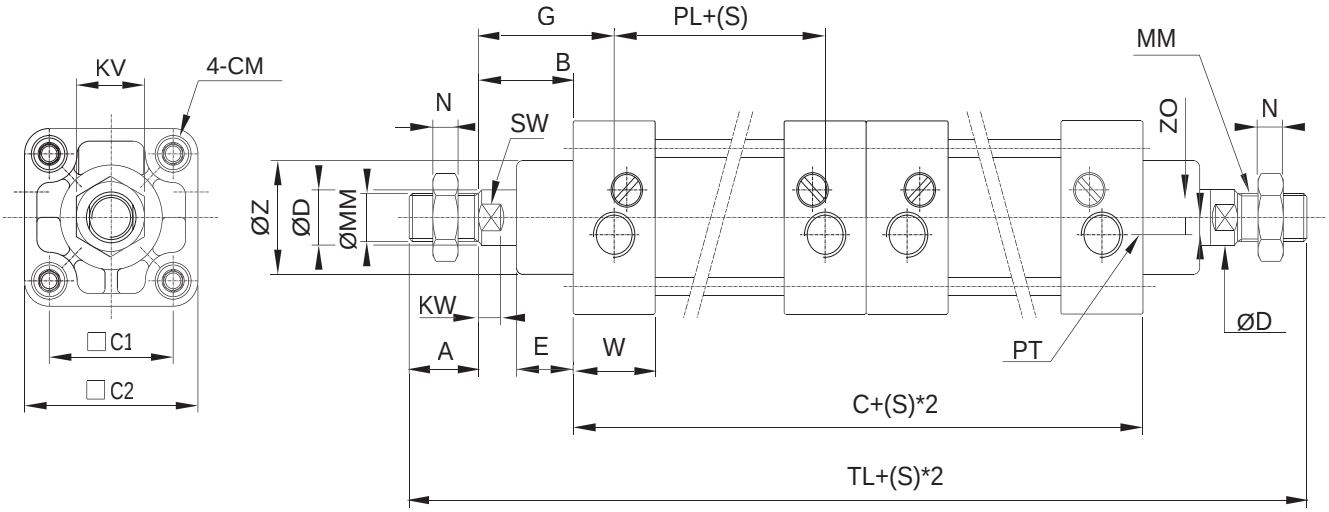


| Ø | C1 | C2 | A | B | C | ØD | E | G | KV | KW | MM | N |
|---|---|---|---|---|---|---|---|---|---|---|---|---|
| 40 | 40 | 56 | 22 | 30 | 180 | 16 | 18 | 43 | 22 | 7 | M14xP1.5 | 8 |
| 50 | 48 | 67 | 28 | 35 | 208 | 20 | 23 | 48.5 | 27 | 10 | M18xP1.5 | 11 |
| 63 | 59 | 78 | 28 | 35 | 208 | 20 | 23 | 48.5 | 27 | 10 | M18xP1.5 | 11 |
| 80 | 74 | 98 | 36 | 43 | 226 | 25 | 28 | 58 | 32 | 11 | M22xP1.5 | 13 |
| 100 | 90 | 116 | 45 | 50 | 244 | 30 | 33 | 67 | 38 | 13 | M26xP1.5 | 16 |
| 125 | 108 | 142 | 50 | 66 | 262 | 35 | 46 | 87 | 41 | 15 | M30xP1.5 | 18 |

| Ø | PL | PT | SW | TL | W | ØZ | ZO | CM |
|---|---|---|---|---|---|---|---|---|
| 40 | 64 | 1/4 | 14 | 284 | 26 | 33 | 5 | M6xP1.0 |
| 50 | 77 | 3/8 | 18 | 334 | 31 | 40 | 6.3 | M8xP1.25 |
| 63 | 77 | 3/8 | 18 | 334 | 31 | 40 | 6.3 | M8xP1.25 |
| 80 | 83 | 1/2 | 22 | 384 | 34 | 45 | 8 | M12xP1.75 |
| 100 | 90 | 1/2 | 27 | 434 | 36 | 50 | 8 | M12xP1.75 |
| 125 | 95 | 1/2 | 31 | 494 | 39 | 62 | - | M14xP1.5 |

* S : stroke

Codinhaiau.com

## Dimensions, three-position cylinder (Ø40~Ø125)

Example) If you order us a SGF model [bore Ø50, 1st step:100mm(S1), 2nd step:200mm(S2)]:

- SGT 50 x 100 x 200. For more options see page 2-69

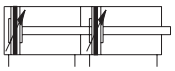

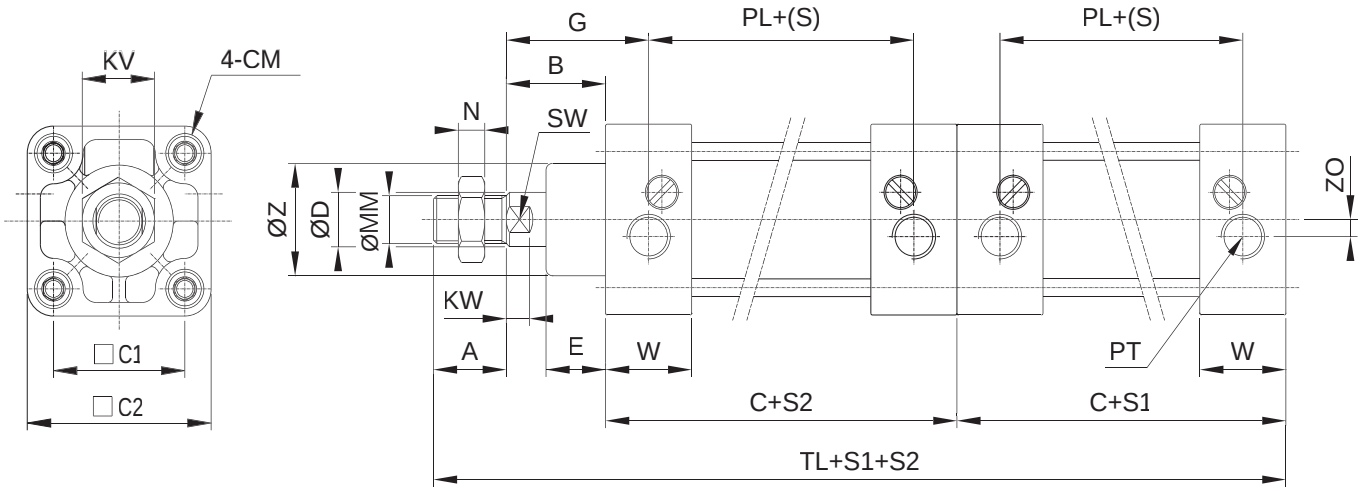


| Ø | C1 | C2 | A | B | C | ØD | E | G | KV | KW | MM | N |
|---|---|---|---|---|---|---|---|---|---|---|---|---|
| 40 | 40 | 56 | 22 | 30 | 90 | 16 | 18 | 43 | 22 | 7 | M14xP1.5 | 8 |
| 50 | 48 | 67 | 28 | 35 | 104 | 20 | 23 | 48.5 | 27 | 10 | M18xP1.5 | 11 |
| 63 | 59 | 78 | 28 | 35 | 104 | 20 | 23 | 48.5 | 27 | 10 | M18xP1.5 | 11 |
| 80 | 74 | 98 | 36 | 43 | 113 | 25 | 28 | 58 | 32 | 11 | M22xP1.5 | 13 |
| 100 | 90 | 116 | 45 | 50 | 124 | 30 | 33 | 67 | 38 | 13 | M26xP1.5 | 16 |
| 125 | 108 | 142 | 50 | 66 | 131 | 35 | 46 | 87 | 41 | 15 | M30xP1.5 | 18 |

| Ø | PL | PT | SW | TL | W | ØZ | ZO | CM |
|---|---|---|---|---|---|---|---|---|
| 40 | 64 | 1/4 | 14 | 232 | 26 | 33 | 5 | M6xP1.0 |
| 50 | 77 | 3/8 | 18 | 271 | 31 | 40 | 6.3 | M8xP1.25 |
| 63 | 77 | 3/8 | 18 | 271 | 31 | 40 | 6.3 | M8xP1.25 |
| 80 | 83 | 1/2 | 22 | 305 | 34 | 45 | 8 | M12xP1.75 |
| 100 | 90 | 1/2 | 27 | 343 | 36 | 50 | 8 | M12xP1.75 |
| 125 | 95 | 1/2 | 31 | 378 | 39 | 62 | - | M14xP1.5 |

* S1 : 1nd step stroke
S2 : 2nd step stroke

Codienhaiau.com

## Dimensions, tandem cylinder (Ø40~Ø125)

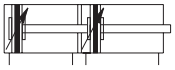

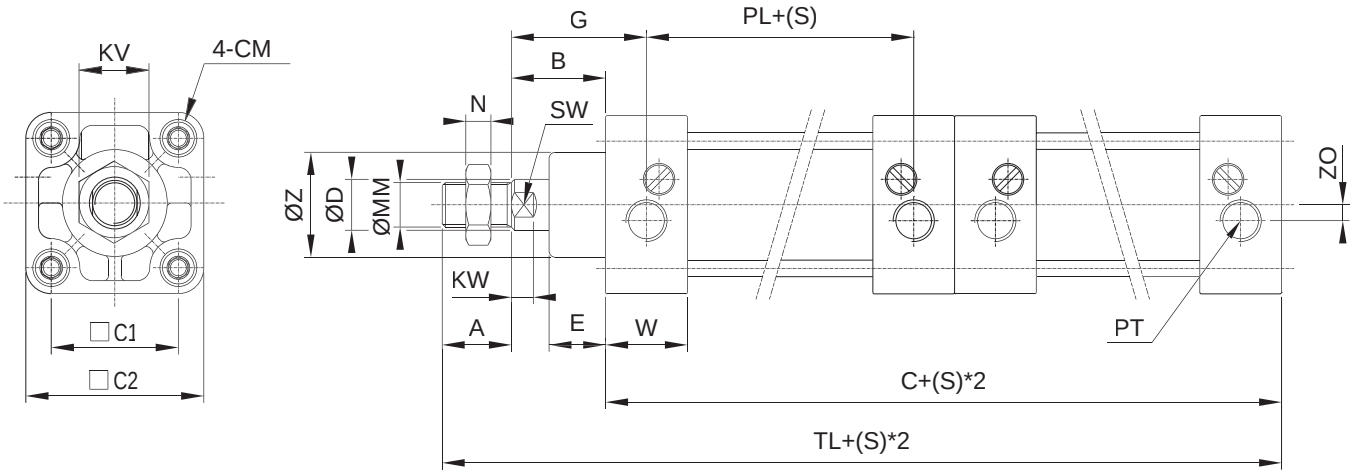


| Ø | C1 | C2 | A | B | C | ØD | E | G | KV | KW | ØMM | N |
|---|---|---|---|---|---|---|---|---|---|---|---|---|
| 40 | 40 | 56 | 22 | 30 | 180 | 16 | 18 | 43 | 22 | 7 | M14xP1.5 | 8 |
| 50 | 48 | 67 | 28 | 35 | 208 | 20 | 23 | 48.5 | 27 | 10 | M18xP1.5 | 11 |
| 63 | 59 | 78 | 28 | 35 | 208 | 20 | 23 | 48.5 | 27 | 10 | M18xP1.5 | 11 |
| 80 | 74 | 98 | 36 | 43 | 226 | 25 | 28 | 58 | 32 | 11 | M22xP1.5 | 13 |
| 100 | 90 | 116 | 45 | 50 | 244 | 30 | 33 | 67 | 38 | 13 | M26xP1.5 | 16 |
| 125 | 108 | 142 | 50 | 66 | 262 | 35 | 46 | 87 | 41 | 15 | M30xP1.5 | 18 |

| Ø | PL | PT | SW | TL | W | ØZ | ZO | CM |
|---|---|---|---|---|---|---|---|---|
| 40 | 64 | 1/4 | 14 | 232 | 26 | 33 | 5 | M6xP1.0 |
| 50 | 77 | 3/8 | 18 | 271 | 31 | 40 | 6.3 | M8xP1.25 |
| 63 | 77 | 3/8 | 18 | 271 | 31 | 40 | 6.3 | M8xP1.25 |
| 80 | 83 | 1/2 | 22 | 305 | 34 | 45 | 8 | M12xP1.75 |
| 100 | 90 | 1/2 | 27 | 343 | 36 | 50 | 8 | M12xP1.75 |
| 125 | 95 | 1/2 | 31 | 378 | 39 | 62 | - | M14xP1.75 |

* S : stroke

Codienhaiau.com

## Dimensions, bellows protected rod cylinder

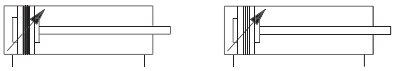

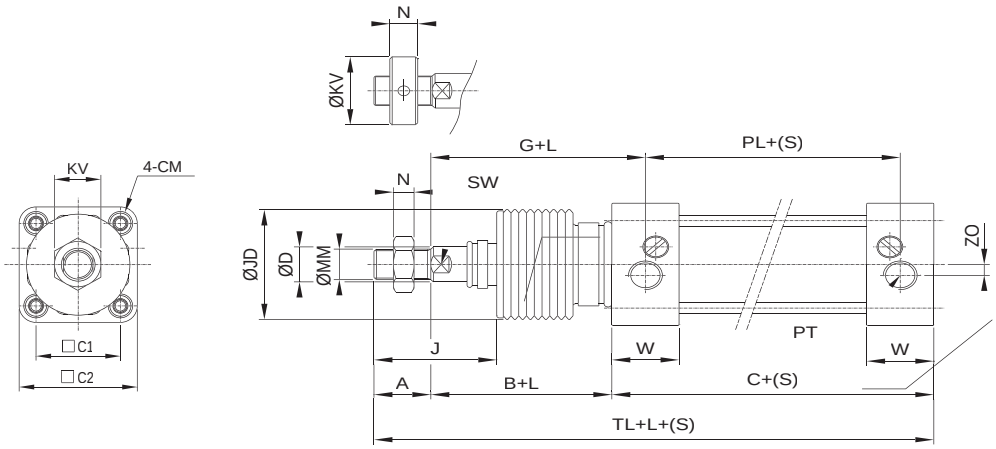


| Ø | C1 | C2 | A | B | C | ØD | G | J | ØJD | KV | ØKV | MM | N | PL | PT | SW |
|---|---|---|---|---|---|---|---|---|---|---|---|---|---|---|---|---|
| 40 | 40 | 56 | 22 | 30 | 38 | 16 | 43 | 46 | 49 | 22 | - | M14xP1.5 | 8 | 64 | 1/4 | 14 |
| 50 | 48 | 67 | 28 | 35 | 42 | 20 | 48.5 | 52 | 49 | 27 | - | M18xP1.5 | 11 | 77 | 3/8 | 18 |
| 63 | 59 | 78 | 28 | 35 | 42 | 20 | 48.5 | 52 | 49 | 27 | - | M18xP1.5 | 11 | 77 | 3/8 | 18 |
| 80 | 74 | 98 | 36 | 43 | 45 | 25 | 58 | 63 | 60 | 32 | - | M22xP1.5 | 13 | 83 | 1/2 | 22 |
| 100 | 90 | 116 | 45 | 50 | 52 | 30 | 67 | 74 | 60 | 38 | - | M26xP1.5 | 16 | 88 | 1/2 | 27 |
| 125 | 108 | 142 | 50 | 66 | 53 | 35 | 87 | 82 | 70 | 41 | - | M30xP1.5 | 18 | 88 | 1/2 | 31 |
| 150 | 132 | 170 | 55 | 71 | 64 | 40 | 91 | 92 | 70 | 50 | - | M36xP1.5 | 18 | 104 | 3/4 | 37 |

| Ø | C1 | C2 | A | B | C | ØD | G | J | ØJD | KV | ØKV | MM | N | PL | PT | TL |
|---|---|---|---|---|---|---|---|---|---|---|---|---|---|---|---|---|
| 180 | 157 | 204 | 63 | 75 | 72 | 45 | 97.5 | 100 | 110 | - | 69 | M40xP1.5 | 24 | 117 | 3/4 | 41 |
| 200 | 178 | 228 | 80 | 85 | 80 | 50 | 100 | 110 | 110 | - | 78 | M45xP1.5 | 25 | 130 | 1 | 46 |
| 250 | 218 | 272 | 100 | 105 | 106 | 60 | 130 | 142 | 130 | - | 90 | M55xP2 | 30 | 156 | 1 | 56 |

| Ø | TL | W | ZO | CM | L | | | | | | | | | | |
|---|---|---|---|---|---|---|---|---|---|---|---|---|---|---|---|
| | | | | | -100 | 101-200 | 201-300 | 301-400 | 401-500 | 501-600 | 601-700 | 701-800 | 801-900 | 901-1000 | 1001- |
| 40 | 142 | 26 | 5 | M6xP1.0 | 40 | 70 | 100 | 130 | 160 | - | - | - | - | - | - |
| 50 | 167 | 31 | 6.3 | M8xP1.25 | 40 | 70 | 100 | 130 | 160 | 190 | - | - | - | - | - |
| 63 | 167 | 31 | 6.3 | M8xP1.25 | 40 | 70 | 100 | 130 | 160 | 190 | - | - | - | - | - |
| 80 | 192 | 34 | 8 | M12xP1.5 | 40 | 70 | 100 | 130 | 160 | 190 | 220 | 250 | 280 | - | - |
| 100 | 219 | 36 | 8 | M12x1.75 | 40 | 70 | 100 | 130 | 160 | 190 | 220 | 250 | 280 | 310 | - |
| 125 | 247 | 39 | - | M14xP1.5 | 40 | 70 | 100 | 130 | 160 | 190 | 220 | 250 | 280 | 310 | - |
| 150 | 270 | 40 | - | M16xP1.5 | 40 | 70 | 100 | 130 | 160 | 190 | 220 | 250 | 280 | 310 | - |

| Ø | TL | W | ZO | CM | L | | | | | | | | | |
|---|---|---|---|---|---|---|---|---|---|---|---|---|---|---|
| | | | | | -100 | 101-250 | 251-400 | 401-500 | 501-600 | 601-700 | 701-800 | 801-900 | 900-1000 | 1001- |
| 180 | 300 | 45 | - | M18xP1.5 | 40 | 80 | 110 | 140 | 170 | 200 | 230 | 250 | 280 | 20+STROKE/3.5 |
| 200 | 345 | 50 | - | M20xP1.5 | 40 | 80 | 110 | 140 | 170 | 200 | 230 | 250 | 280 | 20+STROKE/3.5 |
| 250 | 411 | 50 | - | M24xP1.5 | 40 | 80 | 110 | 140 | 170 | 200 | 230 | 250 | 280 | 20+STROKE/3.5 |

*S: stroke

Codienhaiau.com

## Dimensions, cylinder with positioning sensing(Ø40~Ø100, Ø150)

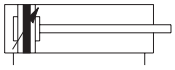

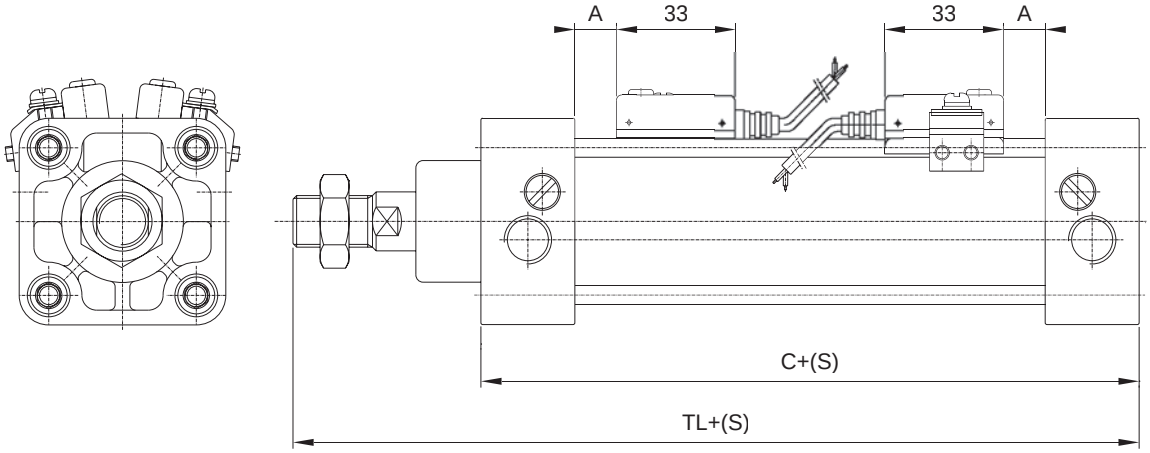


| Ø | A | C | TL |
|---|---|---|---|
| 40 | 2.5 | 90 | 142 |
| 50 | 4.5 | 104 | 167 |
| 63 | 4.5 | 104 | 167 |
| 80 | 6 | 113 | 192 |
| 100 | 9.5 | 124 | 218 |
| 150 | 21.5 | 156 | 292 |

* S : stroke

## Auto Switch(CL-D-A54)

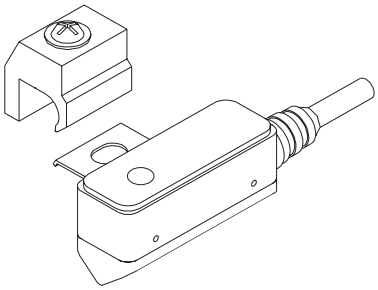

### Specification

| | |
|---|---|
| Voltage | DC 24V(5~100mA),<br>AC 110V(5~40mA), AC 220V(5~20mA) |
| Indicator | LED(red lamp, positive) |
| Insulation | DC 500V, 50M |
| Working temperature | -10˚C ~ 60˚C |
| Cv | Under 2.4V |

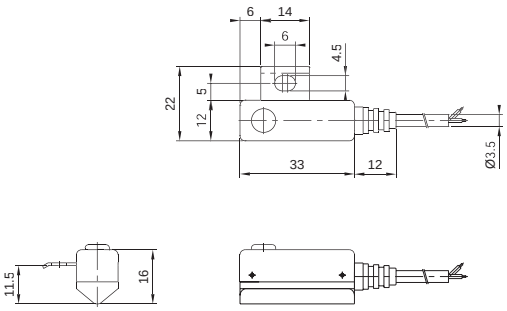


**Mounting methord**

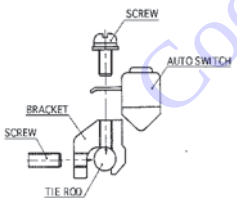


**Electrical wiring**

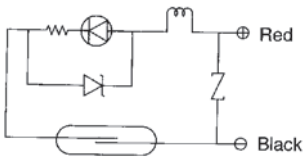


Codienhaiau.com

## Clevis Y

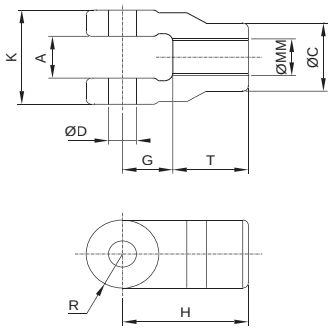


| Ø | A | ØC | ØD | G | H | K | R | T | ØMM |
|---|---|---|---|---|---|---|---|---|---|
| 40 | 16 | 26 | 10.1 | 18 | 45 | 36 | 13 | 27 | M14xP1.5 |
| 50,63 | 20 | 30 | 12.1 | 20 | 55 | 42 | 15 | 35 | M18x1.5 |
| 80 | 28 | 38 | 18.1 | 23 | 60 | 60 | 20 | 37 | M22x1.5 |
| 100 | 32 | 43 | 20.1 | 32 | 67 | 65 | 23 | 35 | M26x1.5 |
| 125 | 35 | 48 | 26.1 | 34 | 70 | 80 | 25 | 36 | M30x1.5 |
| 150 | 38 | 56 | 30.1 | 37 | 85 | 84 | 29 | 48 | M36x1.5 |
| 180 | 45 | 62 | 30.1 | 40 | 90 | 93 | 32 | 50 | M40x1.5 |
| 200 | 55 | 70 | 35.1 | 45 | 100 | 110 | 36 | 55 | M45x1.5 |
| 250 | 60 | 76 | 40.1 | 55 | 130 | 125 | 40 | 75 | M55x2 |

## Clevis I

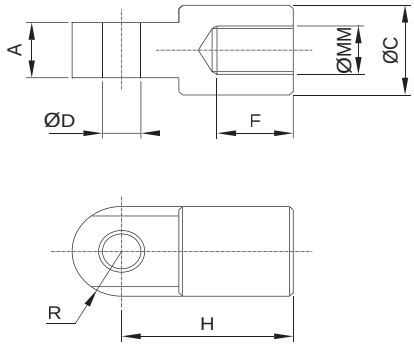


| Ø | A | ØC | ØD | F | R | H | ØMM |
|---|---|---|---|---|---|---|---|
| 40 | 16 | 26 | 10.1 | 20 | 13 | 45 | M14xP1.5 |
| 50,63 | 20 | 30 | 12.1 | 22 | 15 | 50 | M18x1.5 |
| 80 | 28 | 40 | 18.1 | 25 | 20 | 60 | M22x1.5 |
| 100 | 32 | 46 | 20.1 | 25 | 23 | 67 | M26x1.5 |
| 125 | 35 | 50 | 26.1 | 30 | 25 | 70 | M30x1.5 |
| 150 | 38 | 58 | 30.1 | 40 | 29 | 85 | M36x1.5 |
| 180 | 45 | 64 | 30.1 | 45 | 32 | 90 | M40x1.5 |
| 200 | 55 | 72 | 35.1 | 55 | 36 | 100 | M45x1.5 |
| 250 | 60 | 80 | 40.1 | 65 | 40 | 130 | M55x2 |

## Clevis pin Y

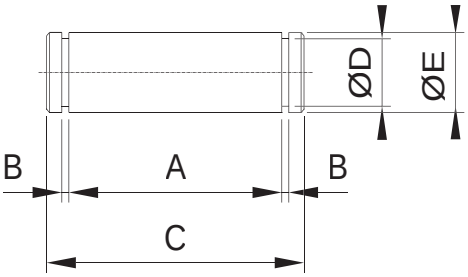


| Ø | A | B | C | D | E | Stop ring |
|---|---|---|---|---|---|---|
| 40 | 36.3 | $1^{+0.1}_{0}$ | 44 | $8^{+0.09}_{0}$ | 10 | E type 10 |
| 50 | 42.3 | $1.2^{+0.1}_{0}$ | 50 | $10^{+0.09}_{0}$ | 20 | 10 |
| 63 | 42.3 | $1.2^{+0.1}_{0}$ | 50 | $10^{+0.09}_{0}$ | 20 | 10 |
| 80 | 60.3 | $1.8^{+0.14}_{0}$ | 70 | $15^{+0.11}_{0}$ | 18 | 15 |
| 100 | 65.3 | $1.8^{+0.14}_{0}$ | 75 | $15^{+0.11}_{0}$ | 20 | 15 |
| 125 | 80.3 | $1.8^{+0.14}_{0}$ | 90 | $19^{+0.13}_{0}$ | 26 | 19 |
| 150 | 84.4 | $2.2^{+0.14}_{0}$ | 95 | $24^{+0.14}_{0}$ | 30 | 24 |
| 180 | 93.4 | $2.2^{+0.14}_{0}$ | 106 | $24^{+0.14}_{0}$ | 30 | 24 |
| 200 | 110.4 | $1.8^{+0.14}_{0}$ | 124 | $33.3^{0}_{-0.25}$ | 35 | C type 35 |
| 250 | 125.4 | $2.0^{+0.14}_{0}$ | 140 | $38^{0}_{-0.25}$ | 40 | C type 40 |

## Clevis pin CB

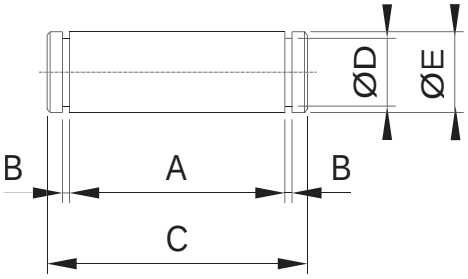


| Ø | A | B | C | D | E | Stop ring |
|---|---|---|---|---|---|---|
| 40 | 36.3 | $1.2^{+0.14}_{0}$ | 44 | $10^{+0.09}_{0}$ | 12 | E type 10 |
| 50 | 36.3 | $1.2^{+0.14}_{0}$ | 44 | $10^{+0.09}_{0}$ | 12 | 10 |
| 63 | 44.3 | $1.2^{+0.14}_{0}$ | 52 | $12^{+0.11}_{0}$ | 16 | 12 |
| 80 | 56.3 | $1.8^{+0.14}_{0}$ | 66 | $15^{+0.11}_{0}$ | 20 | 15 |
| 100 | 64.3 | $1.8^{+0.14}_{0}$ | 74 | $19^{+0.13}_{0}$ | 25 | 19 |
| 125 | 64.3 | $1.8^{+0.14}_{0}$ | 74 | $19^{+0.13}_{0}$ | 25 | 19 |
| 150 | 88.4 | $2.0^{+0.14}_{0}$ | 100 | $24^{+0.13}_{0}$ | 30 | 24 |
| 180 | 100.4 | $2.0^{+0.14}_{0}$ | 112 | $38^{0}_{-0.25}$ | 40 | C type 40 |
| 200 | 135.4 | $2.0^{+0.14}_{0}$ | 148 | $42.5^{0}_{-0.25}$ | 45 | 45 |
| 250 | 155.4 | $2.2^{+0.14}_{0}$ | 170 | $47^{0}_{-0.25}$ | 50 | 50 |

Codenhaiau.com