Goodrive270 Series VFD for Fan and Pump

CONTENTS >>

About Us 2

Application Scenarios 4

Product Features 5

Technical Specification 10

Model Description 11

Expansion Card Selection 12

Reactor&Filter Selection 12

Accessory Selection 13

Standard Wiring 14

Installation Dimensions 15

Automation Product Family 19

Marketing service network 20

Good choice for fan and pump

Goodrive270 series VFD is designed for fan and pump driving in wastewater treatment, HVAC, chemical, metallurgical, electric power and other industries, with high energy efficiency and flexibility.

- Size advantage: Adopts book-type design for easy installation and compact structure
- Motor compatible: Supports the driving of synchronous motors and asynchronous motors
- Install and play: Integrated with the fan and pump industrial application functions (HVAC)
- Energy saving and high efficiency: Uses new ECO algorithm, reducing operating costs
- Flexible configuration: Optionally configured with built-in DC reactor and output reactor
- Highly extensible: Supports Profibus-DP, Profinet, CANopen communications, and I/O expansion
- Enhanced protection: Equipped with thickened protective coating in the core circuit board

Power range: 1.5kW–500kW Voltage level: : AC 3PH 380V~480V

About Us

Corporate Introduction

INVT (Shenzhen INVT Electric Co., Ltd) has been concentrating on industny automation and energy power since its foundation in 2002and is committed to "Providing the best product and service to allow customers more competitiveness". INVT goes public in 2010 and is the first A-share listed company (002334) in Shenzhen Stock Exchange in the industry. At present, INVT owns 15 subsidiaries and more than 3000 employees, over 30 domestic offices and warranty centers and 8 overseas branches, forming a sales network covering more than 80 overseas countries and regions.

INVT is a key Hi-Tech enterprise in China's Torch Program. It is developed based the power electronics, automatic control, and in formation technologies, and its business covers industrial automation, new energy vehicle, network energy, and rail transit. INVT has 12 R&D centers and has been awarded more than 1140 patents. It is the first company in the industrial control industry in China, of which the lab has been awarded the Acceptance of Client Testing (ACT) accreditation by TUV-SUD. INVT lab a qualified China National

Accreditation Service for Conformity Assessment (CNAS) lab and is also a Witness Test Data Program (WTDP) lab authorized by UL. With Guangming technology building in Shenzhen and the industrial park in Suzhou, INVT can provide customers with advanced integrated product development, design, and management, all-around product R&D tests, and automated and informationized operation and production.

The branches and joint maintenance centers all over the world provide customers with solutions, technical training, and service supports, facilitating the services for customers.

In the next ten years, INVT will still persist the business philosophy of "Integrity and Honesty, Professionalism and Excellence", establish a firm foothold in industrial automation and energy and electric power fields based on the three major technologies, and expand and strengthen the core businesses, industrial automation, new energy vehicle, network energy, and rail transit to develop into an international well-known industrial group with a reasonable product structure, advanced technologies, and efficient management capabilities, fully committed to social responsibility and harmonious development.

Industrial Park in Suzhou

Group's core industrial base and R&D center in East China

Industrial Park in Guangming Shenzhen

Group headquarters, new product development and new business incubation base

Application Scenarios

HVAC

Municipal water supply

Sewage treatment

Municipal heating system

Delivery pump

Irrigation pump

Product Features Application Scenarios

Energy-efficient

◆ ECO mode: ensures optimal performance and lowest losses at low dynamic loads, optimizing output power

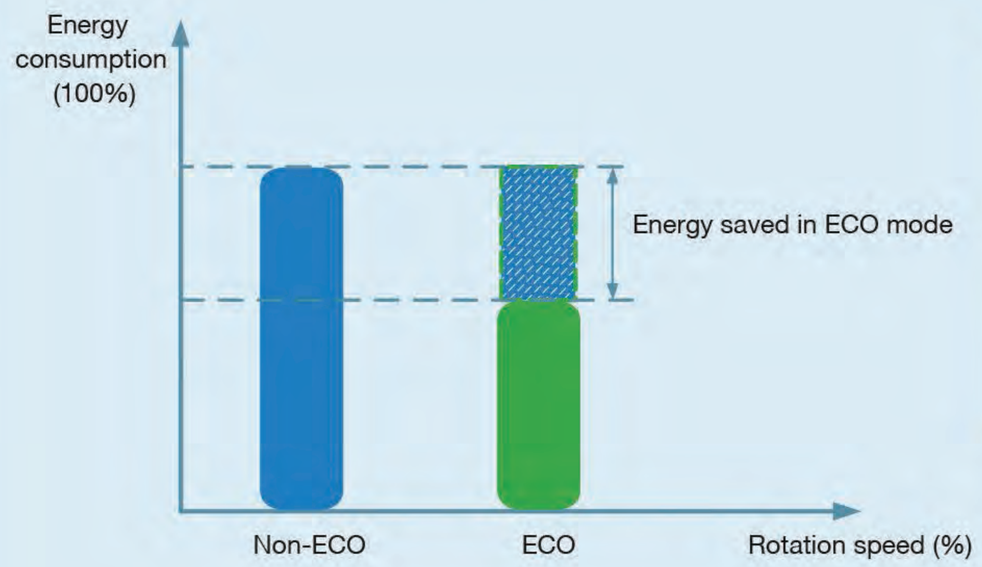

Outcome

Annual power saving: about 8100kWh

Note: This is an internal measured data. The actual effect differs from motor feature and performance.

Conditions

- Applicable to 4kW IE2 asynchronous motors
- Load rate: 40% Motor count: 10
- Running times per year: 24 hours, 365 days
- Speed control mode: V/F,VF energy-saving mode: Max. efficiency
- Gain coefficient for energy saving: 100%
- Angle compensation coefficient for energy saving: 80%

Valid only for asynchronous motor control and V/F control. It is recommended to enable this function for fan and pump applications with small load variations.

◆ Bypass function: external contactors can be controlled by relays to achieve industrial frequency switching and reduce energy consumption

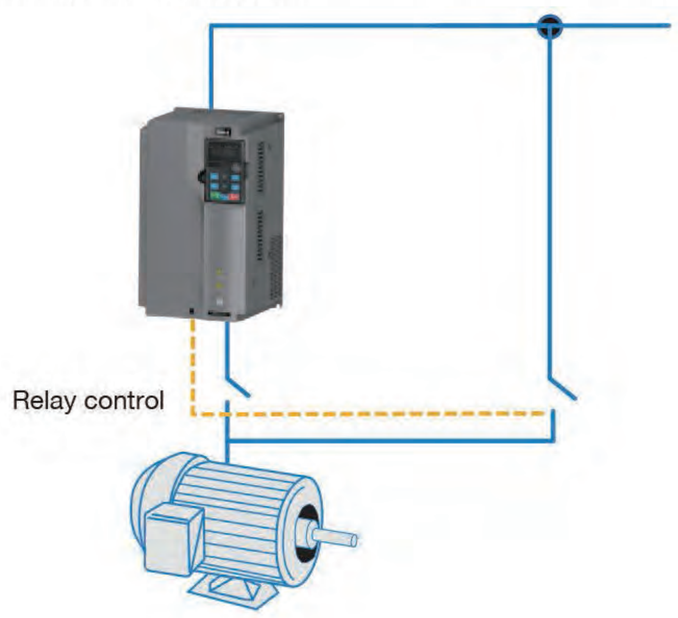

◆ Energy-saving control: enables sleep at night or energy-saving operation under extremely low load conditions by avoiding frequent start and stop

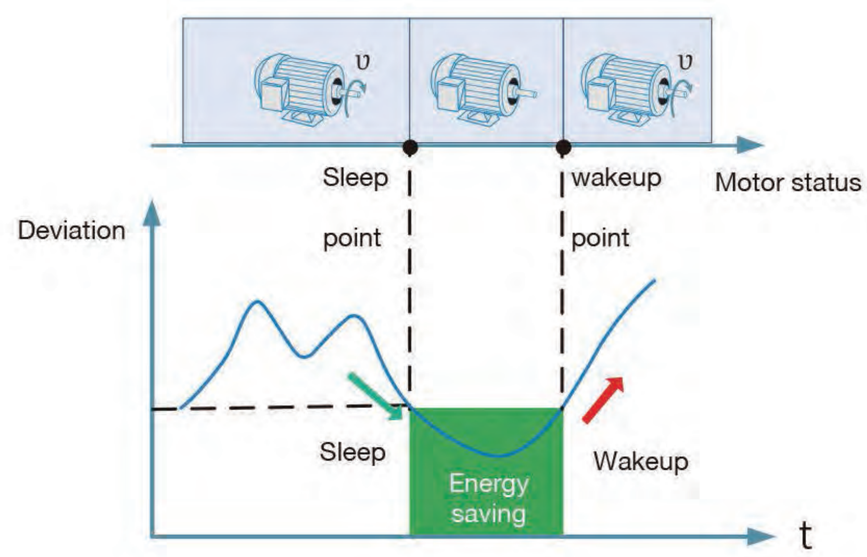

Multifunctional

- Retention at transient voltage drop: ensures continuous operation of equipments during short-term fluctuations in the power grid.

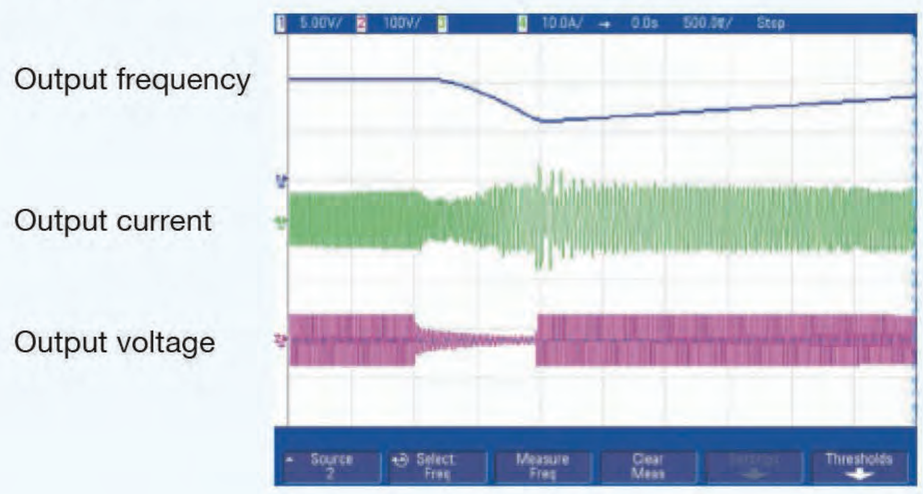

- Level control

When the water level is lower than the lower level limit and higher than the water shortage level, the system runs with the reserve pressure for abnormal cases. When the water level is lower than the water shortage level, the system stops all operations.

- Soft filling of water pipes

The VFD prevents the water hammer effect by slowly and smoothly injecting water into the water pipe during power-up.

- Pipe break detection

Pipe break detection is conducted based on the running frequency of VFD or the upper limit of PID output frequency.

- Multi-pump switch-over and auxiliary pump start/stop: supports variable-frequency pump water supply in the cyclic mode and the fixed mode, and provides sleep control (Note: An additional relay card is required).

The VFD does not designate a pump as the variable-frequency pump. When the water supply pressure is insufficient, the running variable-frequency pump will switch to the power frequency oper and then the next pump will become the variable-frequency pump (up ation, to 8 variable-frequency pumps can be controlled. Only one variable-frequency pump can be used at the same time)

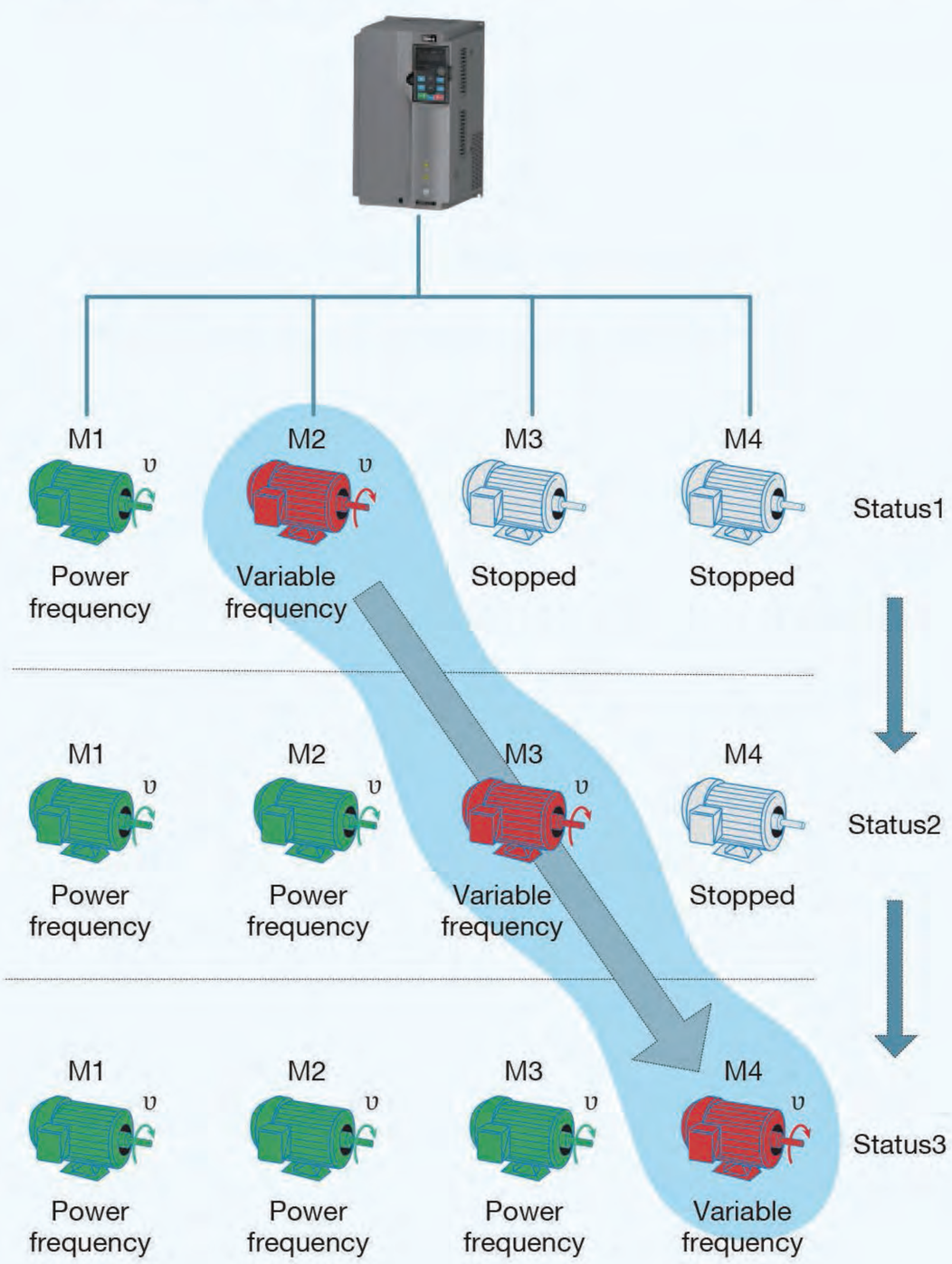

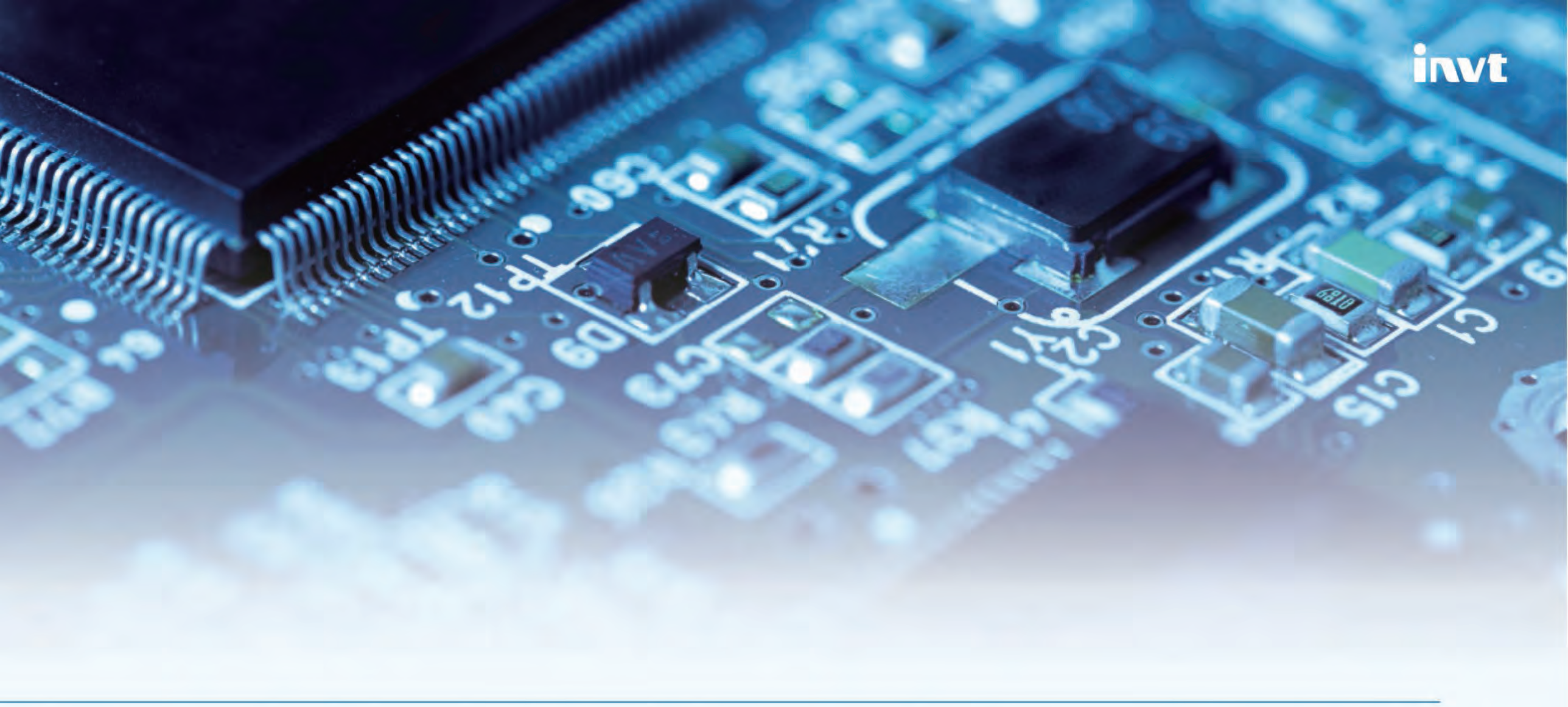

- Rotating speed tracking (for fan): tracks the rotating speed of fan before start-up to reduce the shock to the devices and improve the restart efficiency.

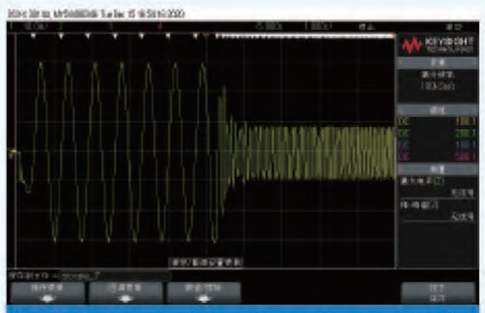

Rotation speed function off，run again after stop at 50Hz

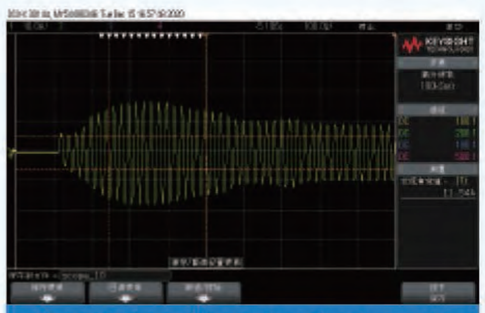

Speed closed-loop function on, run again after stop at 50Hz

- Regeneration avoidance (for fan): A fan is in the state of slight regeneration under the influence of other fans that share the same pipe. The VFD will automatically increase the output frequency to prevent over-voltage alarm and ensure the stable operation of the machine.

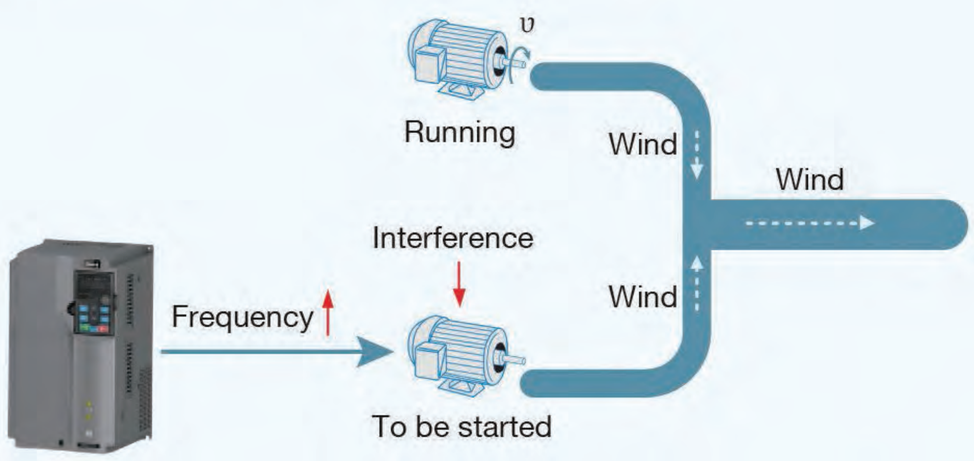

- Restart after power off: The VFD can automatically start up by itself when power-off restart is enabled.

- Multi-step speed reference: A total of 16-step speeds can be set by combining digital states of the four terminals, enabling airflow regulation at different time periods or load conditions.

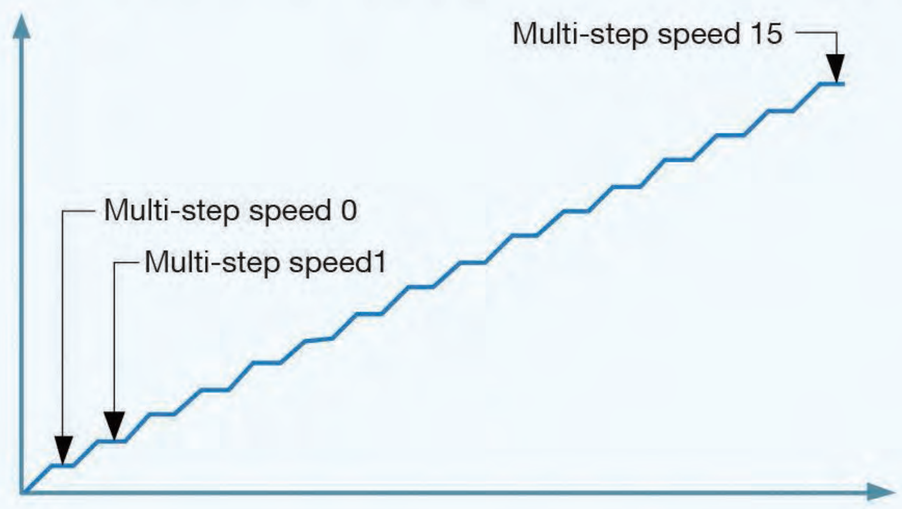

- Fire ride through (for pump): When a fire breaks out in a tunnel or building, the VFD can quickly disperse smoke and ignore other control commands and internal protection functions to keep working.

Reliable

- Desilting: The motor periodic forward rotation, sleep, and reverse rotation enable the pump self-cleaning function, reducing the manual cleaning workload.

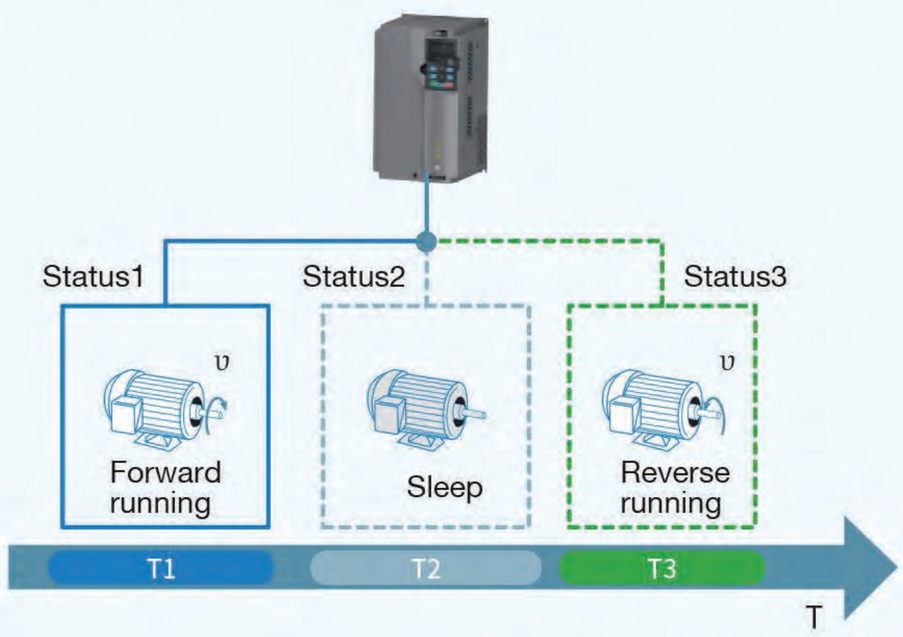

- Independent air duct design: The independent air duct effectively improves the protection effect of the VFD by preventing dust from entering the machine, and brings out the heat from the VFD to improve its reliability and extending its service life.

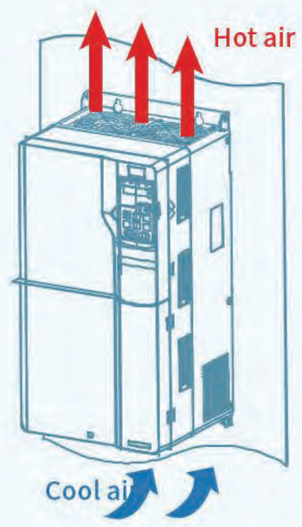

- Frost proofing: When the ambient temperature falls below a set threshold, the motor will automatically rotate to prevent water from freezing and thus protect the pump.

- Motor heating: The VFD outputs DC current to increase the surface temperature of the motor during work interruption, advoiding motor failure caused by condensated water.

- Enhanced PCB coating: After strengthened in terms of three proofings, the PCB gains a strong protection ability to resist harsh environment, which guarantees the long-term healthy operation of the VFD.

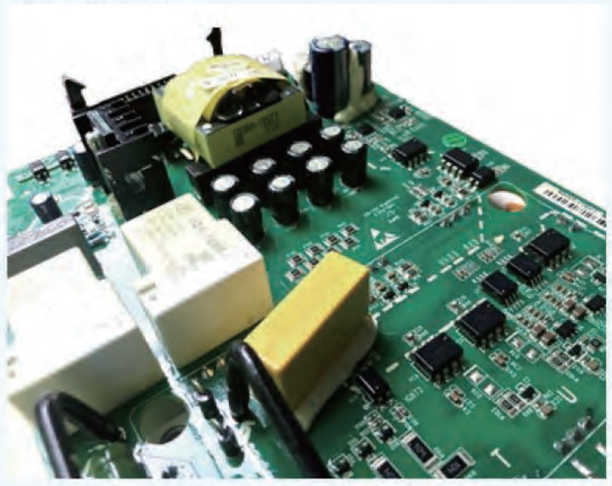

Configurable

Reactor configurations

- **A** For 11kW~355kW: Built-in DC reactor is optional
  For 400kW~500kW: DC reactor is a standard configuration part

- **B** For 220kW and higher: Output reactor is available as an option (select L3 model)

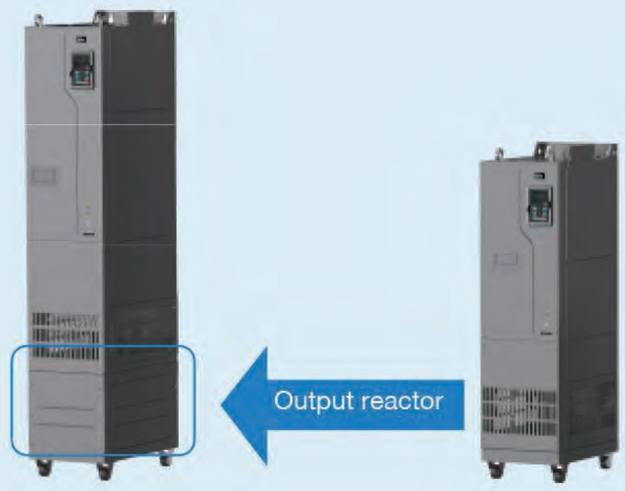

Expansion card configurations

- Support a variety of application environments, meeting the customization requirements.

1	Optional IO expansion card	Provides digital input, digital output, analog input, analog output, and relay terminals
2	Optional communication expansion card	Supports multiple industrial fieldbus systems such as PROFINET/PROFIBUS-DP/CANopen

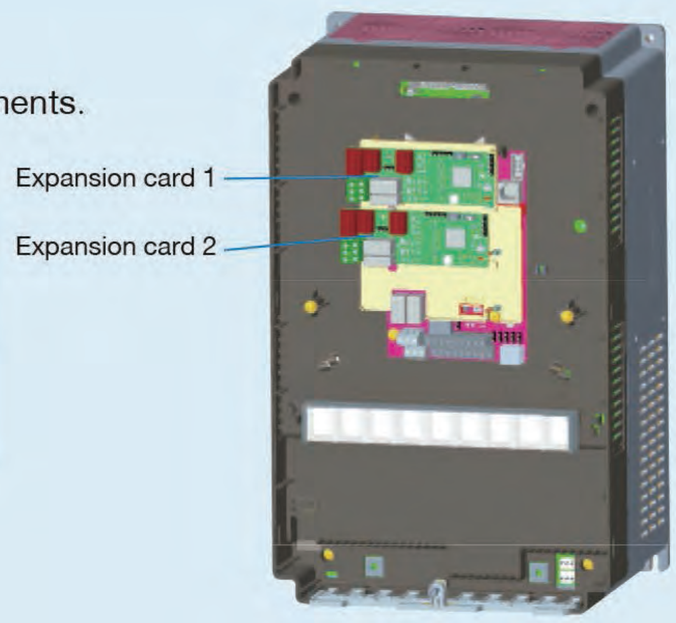

Technical Specifications

Function		Specifications
Technical control performance	Input voltage（V）	◆ AC 3PH 380~480V Rated voltage: 380V
	Allowed voltage transient fluctuation	◆ -15%~+10%
	Input frequency (Hz)	◆ 50Hz or 60Hz; Allowed range: 47~63Hz
	Output frequency (Hz)	◆ 0~400Hz
	Control mode	◆ Space voltage vector control, and sensorless vector control (SVC)
	Motor type	◆ Asynchronous motor (AM) and synchronous motor (SM)
	Speed ratio	◆ For AMs: 1:200 (SVC), for SMs: 1:20 (SVC)
	Speed control accuracy	◆ ±0.2%（(SVC）
	Speed fluctuation	◆ ± 0.3%（(SVC）
	Torque response	◆ <20ms（(SVC）
	Torque control accuracy	◆ ±10%（(SVC）
	Overload capacity	◆ Able to run at 110% of rated current for 1min, and an overload allowed for every 5min
Running control performance	Frequency setting method	◆ Settings can be implemented through digital, analog, pulse frequency, multi-step speed run, simple PLC, PID, and communication. ◆ Settings can be combined and the setting channels can be switched.
	Automatic voltage regulation	◆ The output voltage can be kept constant although the grid voltage changes.
	Fault protection	◆ Many protection functions available, such as protection against overcurrent, overvoltage, undervoltage, overtemperature, and phase loss
	Speed tracking restart	◆ Used to implement impact-free smooth startup for rotating motors
Peripheral interface	Analog input	◆ Two inputs. AI1: 0(2)~10V / 0(4)~20mA; AI2: -10 ~ +10V
	Analog output	◆ Two outputs. AO0/AO1: 0(2)~10V/0(4)~20mA
	Digital input	◆ Five regular inputs. Max. frequency: 1kHz; internal impedance: 3.3kΩ ◆ One high-speed input. Max. frequency: 50kHz
	Digital output	◆ One Y terminal open collector output, sharing the terminal with S4. The function can be selected through a jumper.
	Relay output	◆ One programmable relay output. ◆ RO1A: NO; RO1B: NC; RO1C: common ◆ Contact capacity: 3A/AC250V, 1A/DC30V
	Extended interfaces	◆ Two extended interfaces: SLOT1 and SLOT2 ◆ Supporting communication expansion cards, I/O cards and so on
Other	Installation method	◆ Supports wall-mounting (1.5kW~250kW) ◆ Supports floor-mounting (1.5kW~132kW) ◆ Supports flange-mounting (220kW~500kW)
	Keypad	◆ 1.5~22kW: with laminated LED keyboard as a standard configuration ◆ 30~500kW: with a LED keypad that can be used externally
	EMC filter	◆ A built-in C3 filter is optional for1.5~132kW ◆ A built-in C3 filter is a standard configuration for 160kW and higher
	Temperature of running environment	◆ -10°C ~+50°C; Derating is required when the ambient temperature exceeds 40°C.
	IP rating	◆ IP20 for 200kW and lower ◆ IP00 for 200kW and higher, supporting the optional part IP20 assembly
	Pollution degree	◆ Degree 2
	Cooling method	◆ 1.5kW: Natural cooling ◆ 2.2kW and higher: Forced air cooling

Model description

Product model designation

GD270-160-4-L1
① ② ③ ④

Field	Sign	Description	Content
Product series abbreviation	①	Product series abbreviation	◆ GD270: Goodrive270 series VFD for fan and pump
Rated power	②	Power range	◆ 160: 160kW
Voltage class	③	Voltage class	◆ 4: AC 3PH 380V~480V ◆ Rated voltage: 380V
Management number	④	Optional	◆ Default: Empty ◆ L1: with built-in DC reactor, applicable to 11~500kW models. ◆ L3: with built-in DC reactor and output AC reactor, applicable to 220kW and higher models. Note: DC reactors are standard parts for 400~500kW models.

Product model selection

VFD mode	Output power（kW）	Input（A）	Output current（A）
GD270-1R5-4	1.5	5	3.7
GD270-2R2-4	2.2	6	5
GD270-004-4	4	15	9.5
GD270-5R5-4	5.5	20	13
GD270-7R5-4	7.5	27	17
GD270-011-4(-L1)	11	35(35)	25
GD270-015-4(-L1)	15	44(44)	32
GD270-018-4(-L1)	18.5	46(46)	38
GD270-022-4(-L1)	22	54(54)	45
GD270-030-4(-L1)	30	75(56)	60
GD270-037-4(-L1)	37	90(69)	75
GD270-045-4(-L1)	45	108(101)	92
GD270-055-4(-L1)	55	142(117)	115
GD270-075-4(-L1)	75	177(149)	150
GD270-090-4(-L1)	90	200(171)	180
GD270-110-4(-L1)	110	240(205)	215
GD270-132-4(-L1)	132	278(235)	250
GD270-160-4(-L1)	160	310(296)	305
GD270-185-4(-L1)	185	335(320)	330
GD270-200-4(-L1)	200	385(368)	380
GD270-220-4(-Ln)	220	430(411)	425
GD270-250-4(-Ln)	250	465(444)	460
GD270-280-4(-Ln)	280	540(485)	530
GD270-315-4(-Ln)	315	605(550)	600
GD270-355-4(-Ln)	355	655(600)	650
GD270-400-4-Ln	400	660	720
GD270-450-4-Ln	450	745	820
GD270-500-4-Ln	500	800	860

Note: The values in parentheses in the input current column indicate the input current of the Ln model, n=1or 3.

Expansion card

Card type	Model	Name	Specifications
IO card	EC-IO501-00	IO expansion card	◆ Four digital inputs ◆ One digital output ◆ One analog input ◆ One analog output ◆ Two relay outputs: one double-contact output, and one single-contact output
	EC-IO503-00	Relay card	◆ Two digital inputs ◆ Six relay outputs
Communication card	EC-TX503	PROFIBUS-DP communication card	◆ Supports the PROFIBUS-DP protocol
	EC-TX505	CANopen communication card	◆ Based on the CAN2.0A physical layer ◆ Supports the CANopen protocol
	EC-TX511	CAN master/slave control communication card	◆ Based on the CAN2.0B physical layer ◆ Adopts INVT's master-slave control proprietary protocol
	EC-TX509	PROFINET communication card	◆ Supports the PROFINET protocol

Note: The expansion cards are optional and need to be purchased separately.

Optional parts

Name	Image	Model/Function/Apply to	Name	Image	Model/Function/Apply to
LCD keypad		**Model:** SOP-270 **Function:** External LCD display and operation panel **Apply to:** Full series	LED keypad		**Model:** BOP-270 **Function:** External LCD display and operation panel **Apply to:** Any models in the power range 1.5~22kW (Standard configuration for models in the power range 30~500kW)
Keypad bracket		**Model:** GD350-JPZJ **Function:** For fixing LED/LCD keypad outside the electrical cabinet **Apply to:** Full series	Cabinet rail component	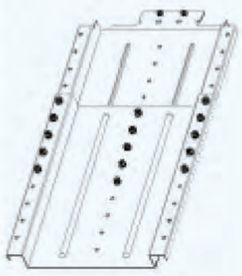	**Model:** GD270-DGZJ **Function:** To assist cabinet installation to improve installation efficiency and safety **Apply to:** Any models in the power range 220~500kW
Flange mounting bracket		**Model:** Conatct us **Functions:** For flange mounting **Apply to:** Any models in the power range 1.5~200kW			

Reactor & filter

VFD model	Reactor		Filter	
	Input reactor	Output reactor	Input filter	Output filter
GD270-1R5-4	ACL2-1R5-4	OCL2-1R5-4	FLT-P04006L-B	FLT-L04006L-B
GD270-2R2-4	ACL2-2R2-4	OCL2-2R2-4		
GD270-004-4	ACL2-004-4	OCL2-004-4	FLT-P04016L-B	FLT-L04016L-B
GD270-5R5-4	ACL2-5R5-4	OCL2-5R5-4		
GD270-7R5-4	ACL2-7R5-4	OCL2-7R5-4		
GD270-011-4(-L1)	ACL2-011-4	OCL2-011-4	FLT-P04032L-B	FLT-L04032L-B
GD270-015-4(-L1)	ACL2-015-4	OCL2-015-4		
GD270-018-4(-L1)	ACL2-018-4	OCL2-018-4	FLT-P04045L-B	FLT-L04045L-B
GD270-022-4(-L1)	ACL2-022-4	OCL2-022-4		
GD270-030-4(-L1)	ACL2-037-4	OCL2-037-4	FLT-P04065L-B	FLT-L04065L-B
GD270-037-4(-L1)	ACL2-037-4	OCL2-037-4	FLT-P04100L-B	FLT-L04100L-B
GD270-045-4(-L1)	ACL2-045-4	OCL2-045-4		
GD270-055-4(-L1)	ACL2-055-4	OCL2-055-4	FLT-P04150L-B	FLT-L04150L-B
GD270-075-4(-L1)	ACL2-075-4	OCL2-075-4		
GD270-090-4(-L1)	ACL2-110-4	OCL2-110-4	FLT-P04240L-B	FLT-L04240L-B
GD270-110-4(-L1)	ACL2-110-4	OCL2-110-4		
GD270-132-4(-L1)	ACL2-160-4	OCL2-200-4		
GD270-160-4(-L1)	ACL2-160-4	OCL2-200-4	FLT-P04400L-B	FLT-L04400L-B
GD270-185-4(-L1)	ACL2-200-4	OCL2-200-4		
GD270-200-4(-L1)	ACL2-200-4	OCL2-200-4		
GD270-220-4(-Ln)	ACL2-280-4	/	FLT-P04600L-B	FLT-L04600L-B
GD270-250-4(-Ln)	ACL2-280-4	/		
GD270-280-4(-Ln)	ACL2-280-4	/		
GD270-315-4(-Ln)	ACL2-350-4	/	FLT-P04800L-B	FLT-L04800L-B
GD270-355-4(-Ln)	ACL2-350-4	/		
GD270-400-4-Ln	ACL2-400-4	/		
GD270-450-4-Ln	ACL2-500-4	/	FLT-P041000L-B	FLT-L041000L-B
GD270-500-4-Ln	ACL2-500-4	/		

Note:

The 11kW~355kW VFD models can be configured with optional built-in DC reactor. The 400kW~500kW VFD models are equipped with DC reactors.

If an output reactor is required for the 220kW and higher VFD models, please select the L3 models.

n=1 or 3.

Wiring diagram

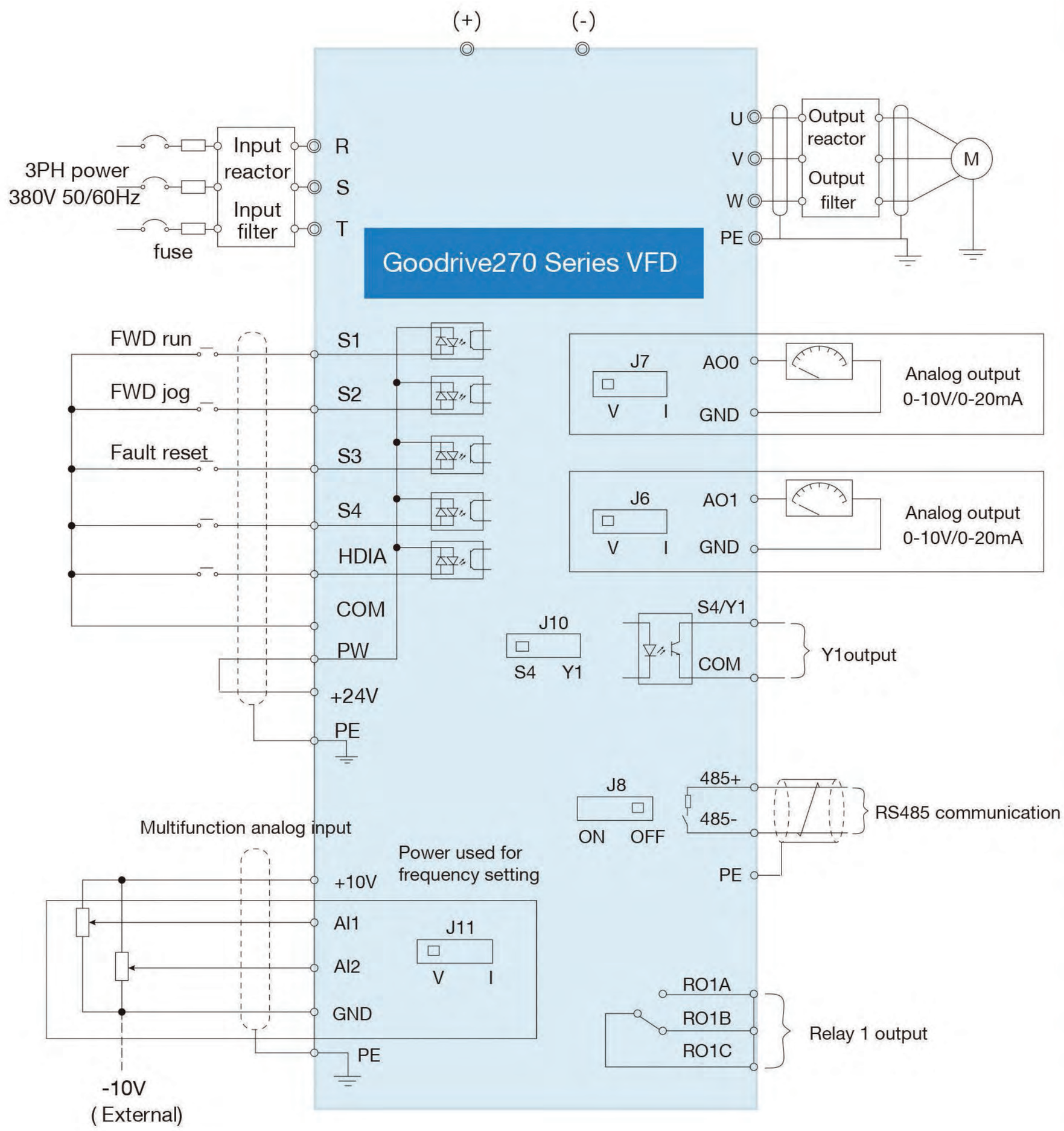

Wall mounting

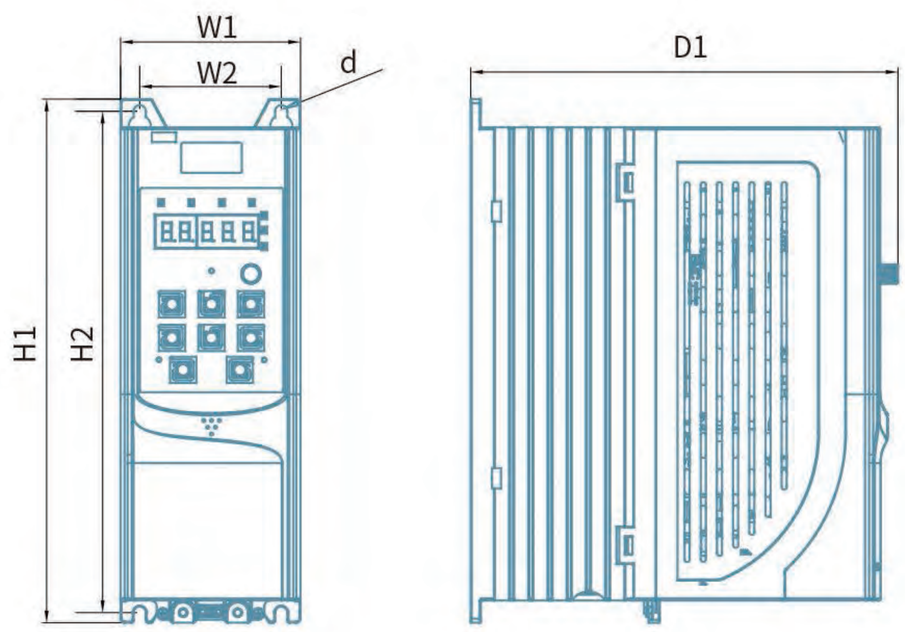

AC 3PH 380V
1.5~7.5kW mounting diagram

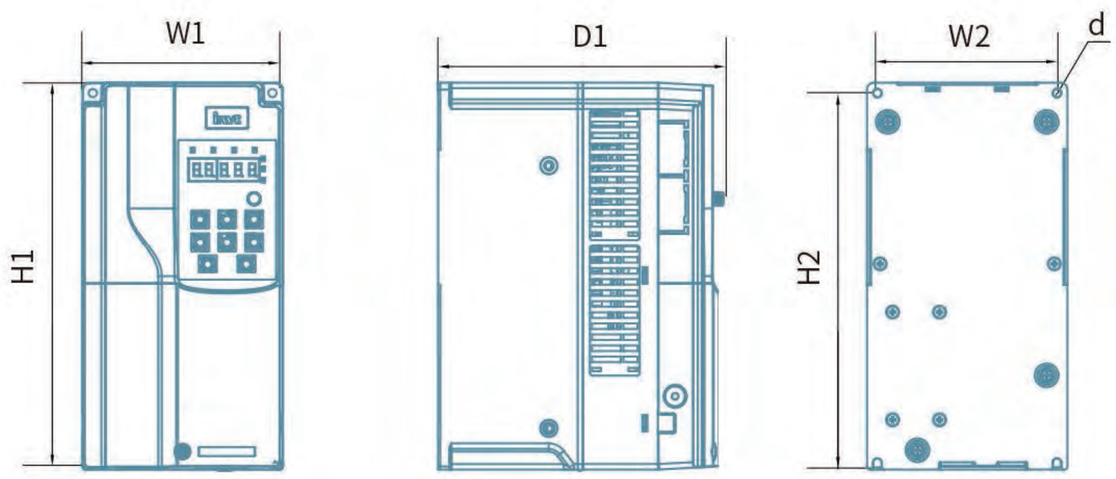

AC 3PH 380V
11~45kW mounting diagram

Dimensions (unit: mm)

VFD model	Outline diemensions (mm)			Mounting hole distance (mm)			Mounting hole diameter (mm)	Fixing screw
	W1	H1	D1	H2	W2	D2		
1.5~4kW	89	231	193	221	70	/	5	M4
5.5~7.5kW	89	259	211.5	248	70	/	6	M5
11~15kW	145	280	207	268	130	/	6	M5
18.5~22kW	169	320	214	308	154	/	6	M5
30~37kW	200	340.6	214	328.6	185	/	6	M5
45kW	250	400	228	380	230	/	6	M5

Wall mounting

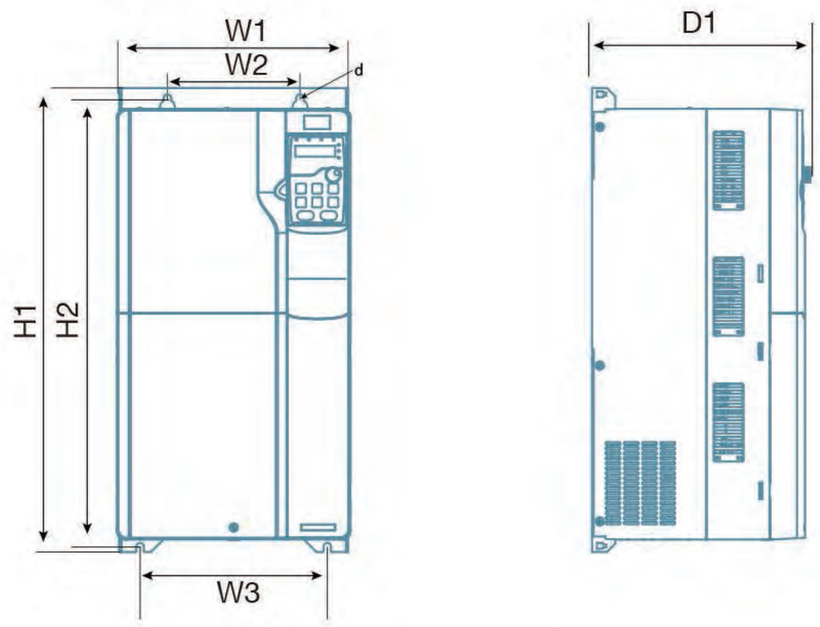

AC 3PH 380V
55~90kW mounting diagram

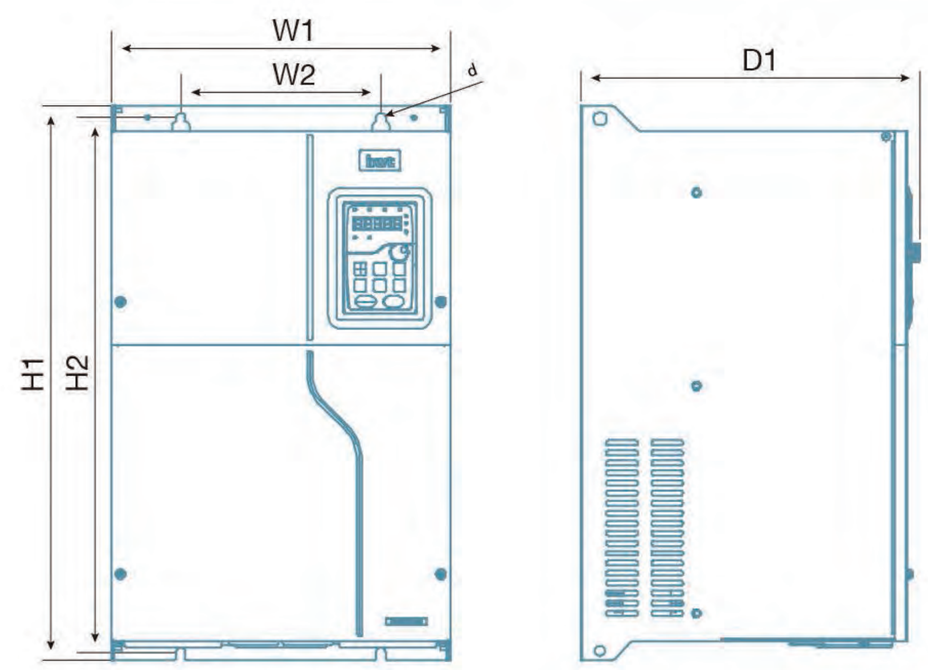

AC 3PH 380V
110~132kW mounting diagram

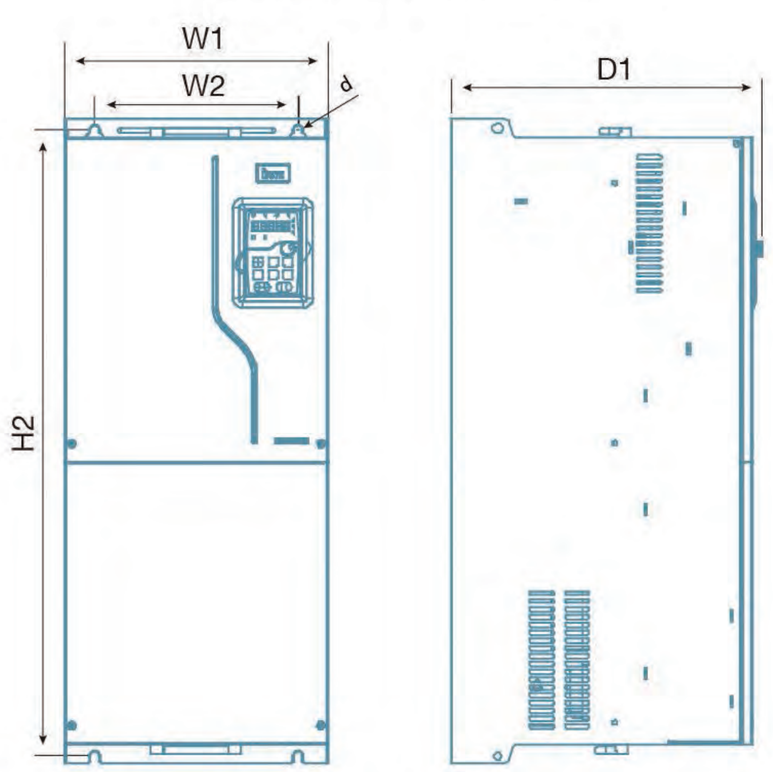

AC 3PH 380V
160~200kW mounting diagram

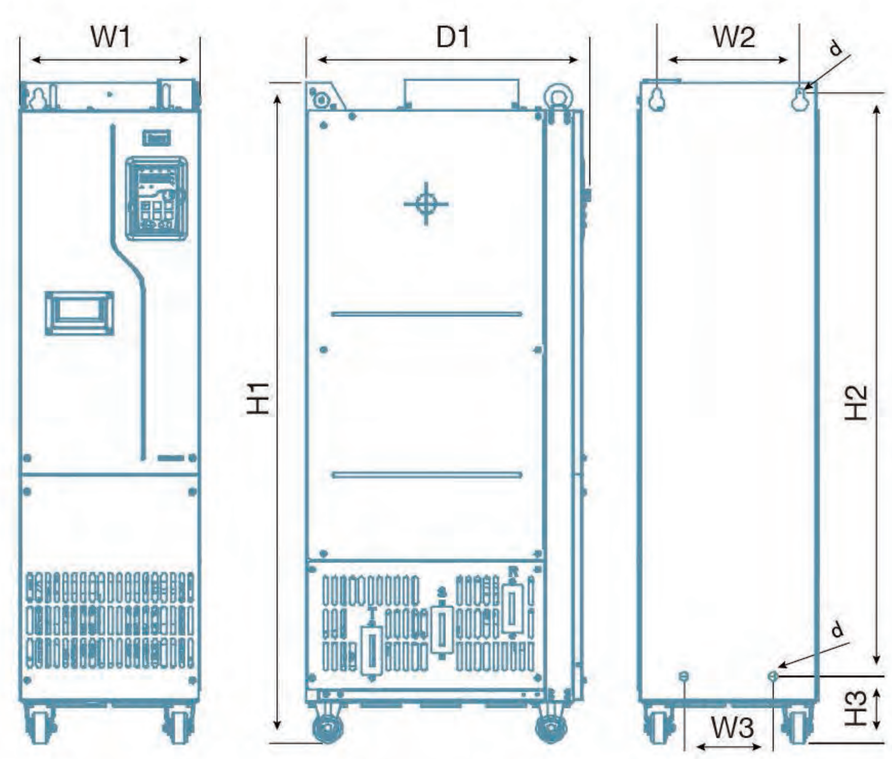

AC 3PH 380V
220~250kW mounting diagram

Dimensions (unit: mm)

VFD model	Outline dimensions (mm)			Mounting hole distance (mm)			Mounting hole diameter (mm)	Fixing screw
	W1	H1	D1	H2	W2	W3		
55~90kW	282	560	263.7	542	160	226	9	M8
110~132kW	338	554	338	534	200	/	9.5	M8
160~200kW	338	825	386.2	800	260	/	11	M10
220~250kW	303	1108	477	980	240	150	14	M12

Floor mounting

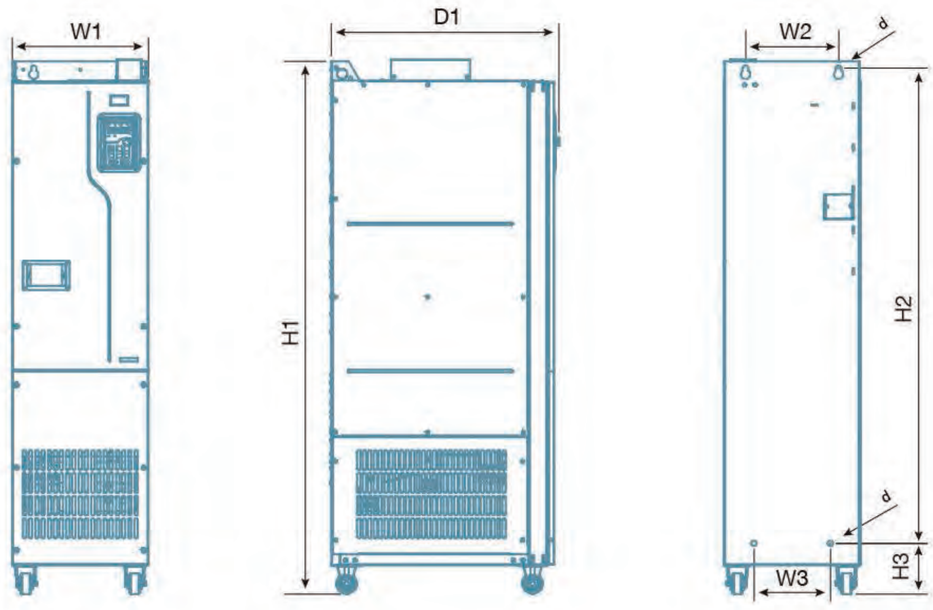

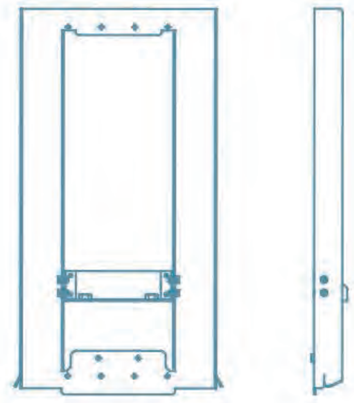

AC 3PH 380V

220-500kW mounting diagram of models without output reactor

Floor mounting bracket

Dimensions (unit: mm)

VFD model	Outline dimensions(mm)			Mounting hole distance(mm)				Mounting hole diameter(mm)	Fixing screw
	W1	H1	D1	H2	H3	W2	W3		
220~250kW	303	1108	477	980	111	240	150	14	M12
280~355kW	330	1288	552	1150	122	225	185	13	M10
400~500kW	330	1398	552	1280	101	240	200	13	M10

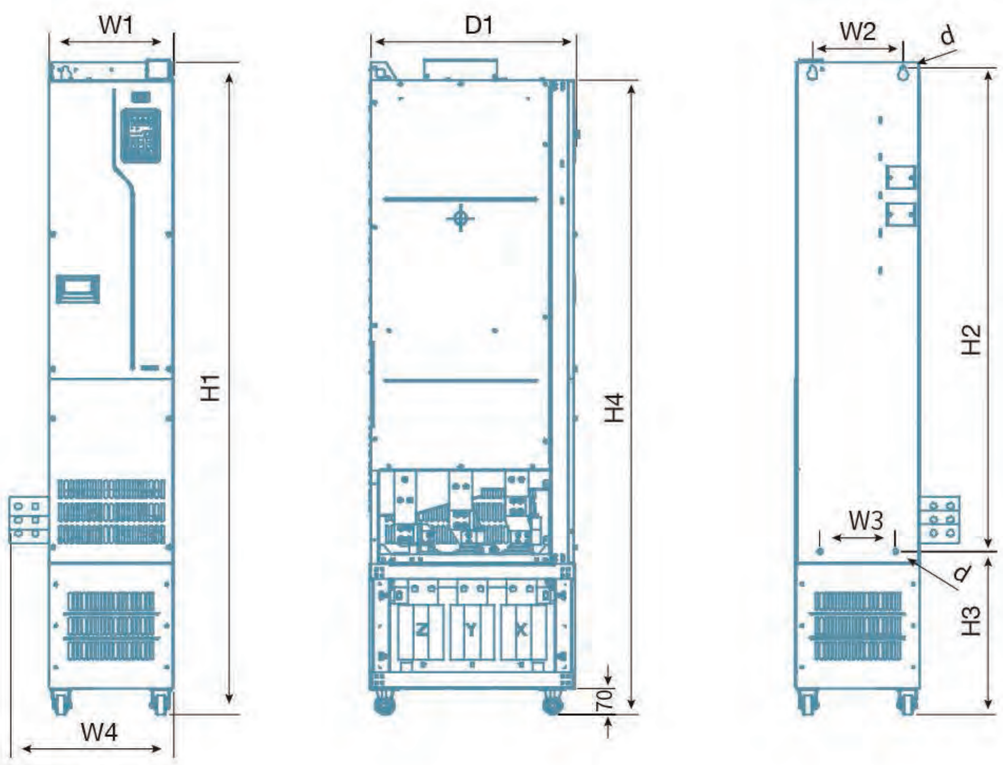

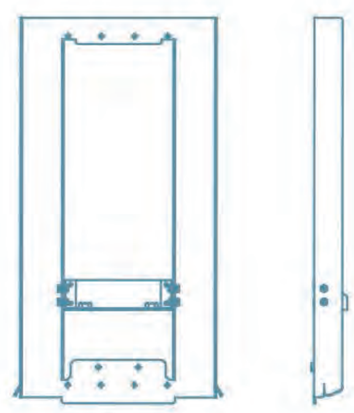

AC 3PH 380V

220-500kW mounting diagram of L3 models without output reactor

Floor mounting bracket

Dimensions (unit: mm)

VFD model	Outline dimensions (mm)				Mounting hole distance (mm)					Mounting hole diameter(mm)	Fixing screw
	W1	W4	H1	D1	H2	H3	H4	W2	W3		
220~250kW	303	350	1470	477	980	471	1420	240	150	14	M12
280~355kW	330	390	1619	552	1150	453	1571	225	185	13	M10
400~500kW	330	432	1729	552	1280	432	1681	240	200	13	M10

Note: Please refer to the product manual for more information about the size of the installation base.

Flange mounting

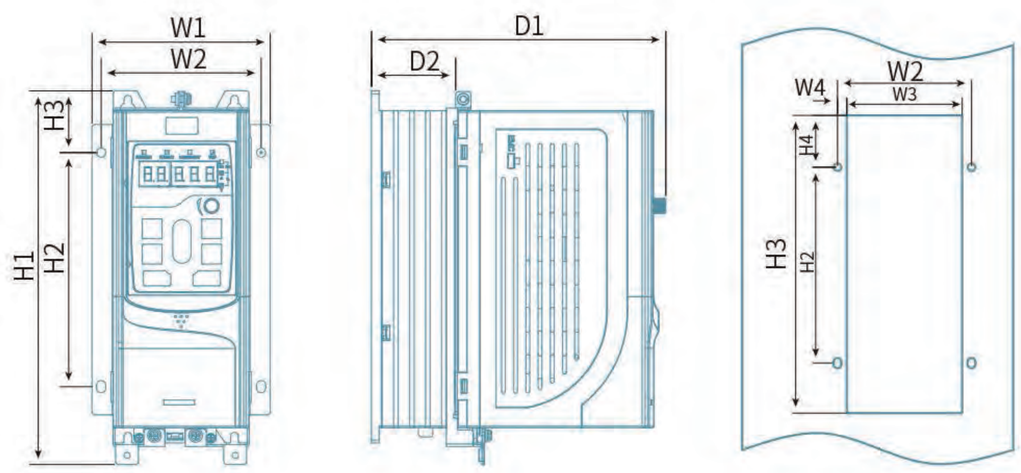

AC 3PH 380V
1.5~7.5kW mounting diagram

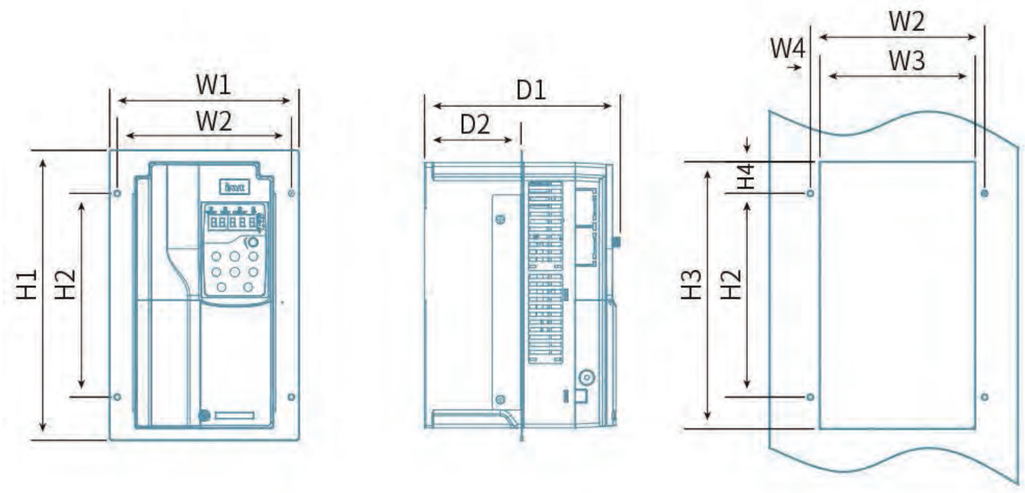

AC 3PH 380V
11~22kWmounting diagram

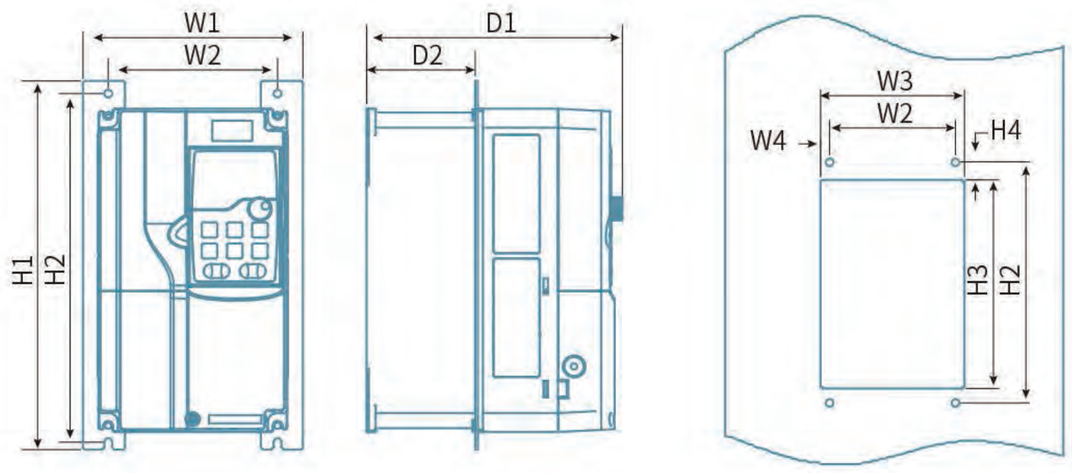

AC 3PH 380V
30~90kWmounting diagram

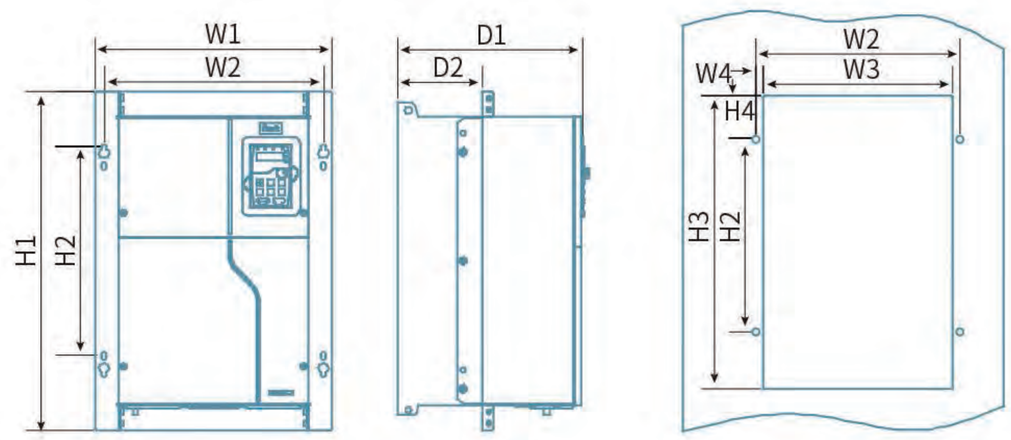

AC 3PH 380V
110~200kWmounting diagram

Dimensions (unit: mm)

VFD model	Outline dimensions (mm)			Mounting hole distance (mm)							Mounting hole diameter (mm)	Fixing screw
	W1	H1	D1	H2	H3	H4	W2	W3	W4	D2		
1.5~4kW	117	245	193	153.3	237	42.5	105	92.5	6.5	55	6	M5
5.5~7.5kW	117	272.5	211.5	180	265	43	105	92.5	6.5	75	6	M5
11~15kW	200	306	207	215	282	33.5	184	164	10	102	6	M5
18.5~22kW	224	346	214	255	322	33.5	208	189	9.5	108	6	M5
30~37kW	266	371	214	250	350.6	50.3	250	224	13	104	6	M5
45kW	316	430	228	300	410	55	300	274	13	118.3	6	M5
55~90kW	352	580	263.7	400	570	90	332	306	13	133.8	9	M8
110~132kW	418.5	600	338	370	559	80.5	389.5	361	14.2	149.5	10	M8
160~200kW	428	868	398.3	625	830	80	394	345	24.5	183	11	M10

Automation Product Family

■ HMI

VK Series
VT Series
VS Series
VA Series
TC Series

■ Controller

IVC1S Series Programmable Controller
IVC1L Series Programmable Controller
INV2 Series Programmable Controller
IVC3 Series Programmable Controller
AX Series High-performance Programmable Controller

■ Servo System

General servo drive System
Industry specific servo system
Industry specific electronic control system

■ VFD

Low-voltage general VFD
Midum-voltage VFD
Industry specific VFD

Marketing service network

INVT Factory * 3

INVT Headquarter in Shenzhen

INVT Overseas Subsidiaries and office *8

More than 100 Overseas Partners

Factory

Overseas Subsidiaries or office

Your trusted industry automation solution provider

Service line:86-755-23535967 E-mail:overseas@invt.com.cn Website:www.invt.com

SHENZHEN INVT ELECTRIC CO.,LTD. INVT Guangming Technology Building, Songbai Road, Matian, Guangming District, Shenzhen, China

Industrial Automation:
- HMI
- PLC
- VFD
- Servo System
- Elevator Intelligent Control System
- Rail Transit Traction System

Electric Power:
- UPS
- DCIM
- Solar Inverter
- New Energy Vehicle Powertrain System
- New Energy Vehicle Charging System
- New Energy Vehicle Motor

INVT Copyright.
Information may be subject to change without notice during product improving.

66003-00257 20220720(V2.1)