Ultra-compact Pre-wired Photomicrosensor (Non-modulated)
EE-SX95

Meeting Customer Needs with Ultra-compact Sensors that Mount with M3 Screws

- Mount using M3 or M2 screws.
- Reliable sensing slot depth of 6.5 mm.
- Indication of sensing window for easy confirmation of insertion depth.
- Bright indicator for confirmation from many directions.
- Both light-ON and dark-ON outputs provided.
- All models available with either standard cable or flexible robot cable.
- Load short-circuit protection circuit provided.

Refer to the *Safety Precautions* on page 5.

For the most recent information on models that have been certified for safety standards, refer to your OMRON website.

Features

Mount Using M2 or M3 Screws

The EE-SX95 can be mounted using M2 or M3 screws, so it can easily replace an existing Sensor mounted with M2 screws.

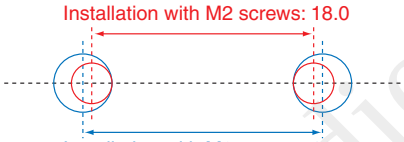

Example for the EE-SX950-W

Reliable Best-in-Class Sensing Slot Depth of 6.5 mm

(Based on April 2013 OMRON investigation.)

A deeper slot helps prevent the sensing object from coming into contact with the base of the slot, creating greater tolerance in mechanism design.

Indication of Sensing Window for Easy Confirmation of Insertion Depth

The location of the sensing window is indicated on the insertion slot so that you can visually confirm whether the sensing object covers the sensing window and easily check the insertion depth.

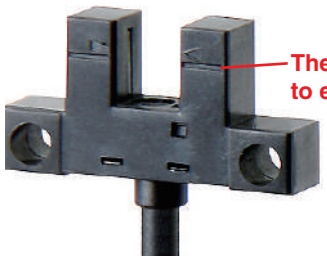

Bright Indicator for Confirmation from Many Directions

The bright light indicator can be checked from up to four directions to enable flexible selection of the installation location.

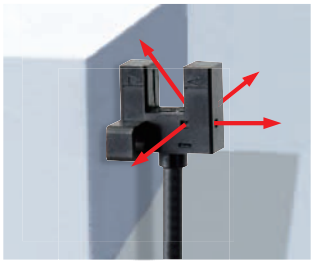

Codienhaiau.com

Ordering Information

Sensors

Infrared light

Appearance	Sensing method	Sensing distance	Output configuration	Connection method (Cable length)	Output type	Model
Standard 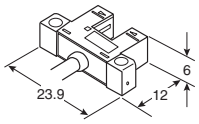	Through-beam (with slot)	5 mm (slot width)	Light-ON Dark-ON (2 outputs)	Pre-wired model with standard cable (1 m)	NPN	**EE-SX950-W 1M** *1
					PNP	**EE-SX950P-W 1M** *2
				Pre-wired model with robot cable (1 m)	NPN	**EE-SX950-R 1M** *1
				Pre-wired connector model with robot cable (0.3 m)	NPN	**EE-SX950-C1J-R 0.3M**
L-shaped 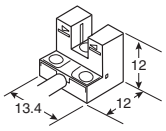				Pre-wired model with standard cable (1 m)	NPN	**EE-SX951-W 1M** *1
					PNP	**EE-SX951P-W 1M** *2
				Pre-wired model with robot cable (1 m)	NPN	**EE-SX951-R 1M** *1
				Pre-wired connector model with robot cable (0.3 m)	NPN	**EE-SX951-C1J-R 0.3M**
F-shaped 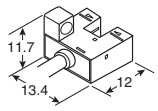				Pre-wired model with standard cable (1 m)	NPN	**EE-SX952-W 1M** *1
					PNP	**EE-SX952P-W 1M** *2
				Pre-wired model with robot cable (1 m)	NPN	**EE-SX952-R 1M** *1
				Pre-wired connector model with robot cable (0.3 m)	NPN	**EE-SX952-C1J-R 0.3M**
R-shaped 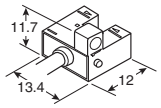				Pre-wired model with standard cable (1 m)	NPN	**EE-SX953-W 1M** *1
					PNP	**EE-SX953P-W 1M** *2
				Pre-wired model with robot cable (1 m)	NPN	**EE-SX953-R 1M** *1
				Pre-wired connector model with robot cable (0.3 m)	NPN	**EE-SX953-C1J-R 0.3M**
U-shaped 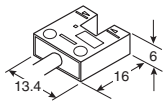				Pre-wired model with standard cable (1 m)	NPN	**EE-SX954-W 1M** *1
					PNP	**EE-SX954P-W 1M** *2
				Pre-wired model with robot cable (1 m)	NPN	**EE-SX954-R 1M** *1
				Pre-wired connector model with robot cable (0.3 m)	NPN	**EE-SX954-C1J-R 0.3M**

*1. A model is available with a 3-m cable. The model number is EE-SX95□-□ 3M.(Example: EE-SX950-W 3M)
*2. A pre-wired model with a PNP output and 1-m robot cable is available. The model number is EE-SX95□P-R 1M.(Example: EE-SX950P-R 1M)

Accessories (Order Separately)

Connector with Robot Cable

Type	Cable length	Model	Remarks
Connector with Cable	2 m	**EE-1016-R 2M**	Connector with lock, AWG26, 4-core Robot Cable

Codienhaiau.com

Ratings and Specifications

Item		Type	Standard	L-shaped	F-shaped	R-shaped	U-shaped
	NPN output	Pre-wired models	EE-SX950-☐	EE-SX951-☐	EE-SX952-☐	EE-SX953-☐	EE-SX954-☐
		Pre-wired connector models	EE-SX950-C1J-R	EE-SX951-C1J-R	EE-SX952-C1J-R	EE-SX953-C1J-R	EE-SX954-C1J-R
	PNP output	Pre-wired models	EE-SX950P-☐	EE-SX951P-☐	EE-SX952P-☐	EE-SX953P-☐	EE-SX954P-☐

Sensing distance		5 mm (slot width)
Standard sensing object		Opaque: 1.8 × 0.8 mm min.
Differential travel		0.025 mm max. *1
Light source (wave length)		Infrared LED (940 nm)
Indicator		Light indicator (red LED)
Power supply voltage		5 to 24 VDC ±10%, ripple (p-p): 10% max.
Current consumption		15 mA max.
Control output		Load power supply voltage: 5 to 24 VDC Load current: 50 mA max. OFF current: 0.5 mA max. 50 mA load current with a residual voltage of 0.7 V max. 5 mA load current with a residual voltage of 0.4 V max.
Protection circuit		Load short-circuit protection
Response frequency		1 kHz min. (3 kHz average) *2
Ambient illumination		1,000 lx max. with fluorescent light on the surface of the receiver
Ambient temperature range		Operating: –25 to 55°C Storage: –30 to 80°C (with no icing or condensation)
Ambient humidity range		Operating: 5% to 85% Storage: 5% to 95% (with no icing or condensation)
Vibration resistance (destruction)		10 to 2,000 Hz (peak acceleration: 150m/s^2) with a 0.75-mm single amplitude for 2.5 h (15-min periods, 10 cycles) each in X, Y, and Z directions
Shock resistance (destruction)		500 m/s^2 for 3 times each in X, Y, and Z directions
Degree of protection		IEC60529 IP50
Connection method		Pre-wired models (standard length: 1 m), Pre-wired connector models (standard length: 0.3 m)
Weight (packed state)	**Pre-wired models**	Approx. 15 g
	Pre-wired connector models	Approx. 7 g
Materials	**Case/cover**	Polybutylene terephthalate (PBT)
	Emitter/receiver	Polycarbonate (PC)

*1. The differential travel is the value when a sensing object is moved in a lateral direction to the slot.
*2. The response frequency was measured by detecting the following rotating disk.

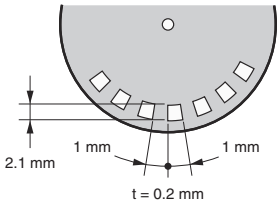

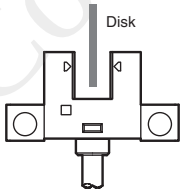

Applicable Connector

Item		Product	Connector with Robot Cable
		Model	EE-1016-R
		Appearance	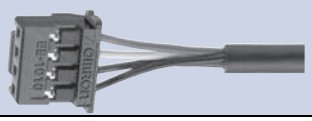
Contact resistance			25 mΩ max. (at 10 mA DC and 20 mV max.)
Insertion strength			20 N max.
Surplus strength (housing holding strength)			15 N min.
Cable length			2 m
Ambient temperature range			–25 to 85°C
Materials	**Housing**		Nylon
	Contact		Phosphor bronze

Codienhaian.com

Dimensions

(Unit: mm)

Tolerance class IT16 applies to dimensions in this datasheet unless otherwise specified.

Sensors

EE-SX950-☐
EE-SX950P-☐
EE-SX950-C1J-R

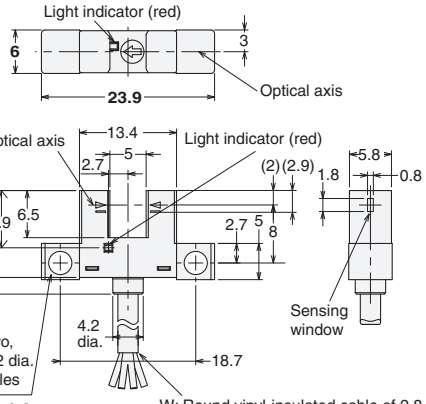

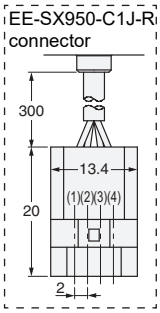

Terminal Arrangement

(1)	Vcc
(2)	OUT2
(3)	GND(0 V)
(4)	OUT1

-W: Round vinyl-insulated cable of 2.8 dia., 4 cores,(0.14 mm² with 0.90-mm dia. insulator); Standard length: 1 m
-R: Robot cable of 2.8 dia., 4 cores, (0.15 mm² with 0.92-mm dia. insulator); Standard length: 1 m

EE-SX951-☐
EE-SX951P-☐
EE-SX951-C1J-R

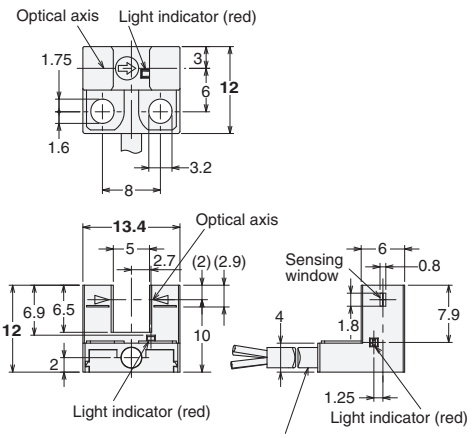

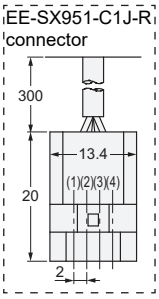

Terminal Arrangement

(1)	Vcc
(2)	OUT2
(3)	GND(0 V)
(4)	OUT1

-W: Round vinyl-insulated cable of 2.8 dia., 4 cores, (0.14 mm² with 0.90-mm dia. insulator);Standard length: 1 m
-R: Robot cable of 2.8 dia., 4 cores, (0.15 mm² with 0.92-mm dia. insulator);Standard length: 1 m

EE-SX952-☐
EE-SX952P-☐
EE-SX952-C1J-R

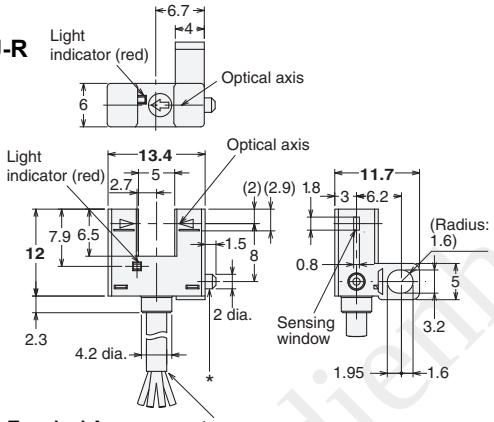

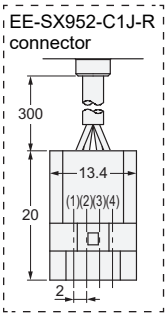

Terminal Arrangement

(1)	Vcc
(2)	OUT2
(3)	GND(0 V)
(4)	OUT1

-W: Round vinyl-insulated cable of 2.8 dia., 4 cores,(0.14 mm² with 0.90-mm dia. insulator); Standard length: 1 m
-R: Robot cable of 2.8 dia., 4 cores, (0.15 mm² with 0.92-mm dia. insulator); Standard length: 1 m

* The lug is used to prevent turning. When installing, make a fixed hole of 2.1 to 2.3 mm dia.

EE-SX953-☐
EE-SX953P-☐
EE-SX953-C1J-R

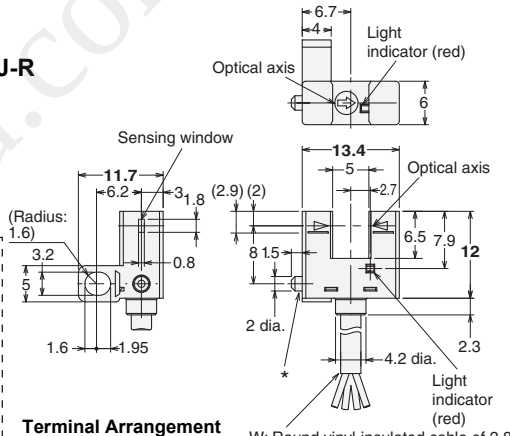

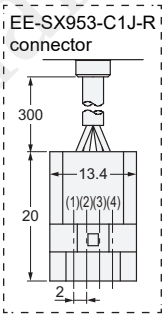

Terminal Arrangement

(1)	Vcc
(2)	OUT2
(3)	GND(0 V)
(4)	OUT1

-W: Round vinyl-insulated cable of 2.8 dia., 4 cores, (0.14 mm² with 0.90-mm dia. insulator);Standard length: 1 m
-R: Robot cable of 2.8 dia., 4 cores, (0.15 mm² with 0.92-mm dia. insulator);Standard length: 1 m

* The lug is used to prevent turning. When installing, make a fixed hole of 2.1 to 2.3 mm dia.

EE-SX954-☐
EE-SX954P-☐
EE-SX954-C1J-R

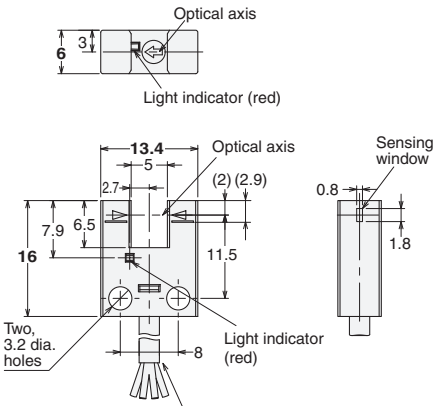

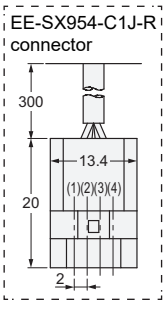

Terminal Arrangement

(1)	Vcc
(2)	OUT2
(3)	GND(0 V)
(4)	OUT1

-W: Round vinyl-insulated cable of 2.8 dia., 4 cores, (0.14 mm² with 0.90-mm dia. insulator); Standard length: 1 m
-R: Robot cable of 2.8 dia., 4 cores, (0.15 mm² with 0.92-mm dia. insulator); Standard length: 1 m

Accessories (Order Separately)

Connector with Robot Cable

EE-1016-R

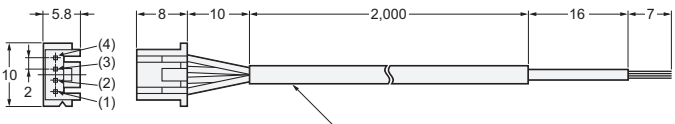

Terminal Arrangement

(1)	⊕	Brown
(2)	OUTPUT 2	White
(3)	⊖	Blue
(4)	OUTPUT 1	Black

Note: The Connector fits into a connector of the Sensor, so there is no protrusion from the surface of the connector of the Sensor.